OPENING IN BRICKWORK

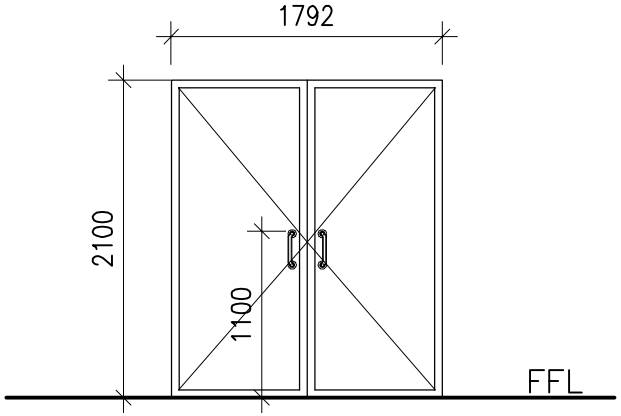

INTERNAL ELEVATION
SCALE 1:50

NAME	**TO ARCHITECT'S SPECIFICATION AND CONTRACTOR'S SUPPLIERS SHOP DRAWINGS** 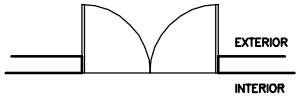 INTERNAL
LOCATION	EXIT DOOR
DOOR	PURPOSE MADE GLASS DOOR CONSISTING OF TWO ACTIVE LEAVES TO FIT STRUCTURAL OPENING OF 1792mm(W) x 2100mm(H) x 230mm WITH AIR TIGHT SEALS BY SPECIALIST
FINISH	CLEAR
FRAME	ALUMINIUM
FINISH	N/A
GLAZING	MIN.12mm TEMPERED GLASS AS SUPPLIED BY GSA OR EQUAL AND APPROVED. FITTED IN STRICT ACCORDANCE WITH MANUFACTURERS SPEC. AND TO COMPLY WITH SANS 10400
HINGES	AS SUPPLIED BY MANUFACTURER
LOCK	AS SUPPLIED BY MANUFACTURER
HANDLE	
DOOR CLOSER/ FLOOR SPRING	BY MANUFACTURER ASSA ABLOY OR EQUAL AND APPROVED
DOORSTOP	
OTHER	

NOTES:

ALL TRADE NAMES AS SPECIFIED OR EQUAL AND APPROVED
ALL QUANTITIES TO BE CHECKED AND ANY DISCREPANCIES VERIFIED WITH ARCHITECT PRIOR TO ORDERING OF ANY MATERIALS OR FITTINGS.
ALL BRICK WORK, DIMENSIONS AND LEVELS TO BE CHECKED ON SITE AND ANY DISCREPANCIES VERIFIED WITH ARCHITECT BEFORE COMMENCING ANY WORK
ALL OPENING/DIMENSION TO BE CHECKED ON SITE AND ANY DISCREPENCIES VERIFIED BEFORE MANUFACTURING OF DOORS
ALL BUILDING MATERIALS AND WORK TO COMPLY WITH SANS 10400
FIGURED DIMENSIONS TO BE TAKEN IN PREFERENCE TO SCALING OF DRAWINGS

NB.
ALL GLAZING TO BE FITTED AND CERTIFIED BY SPECIALIST

CHOROMANSKI
ARCHITECTS

490 LILIAN NGOYI ROAD
MORNINGSIDE
DURBAN
4000

TEL: 031 303 2985
FAX: 031 303 2918
email: admin@choromanski.co.za

PROJECT:
PHASE 1 COMPLETION, THE BEER HALL COMPLEX
102 FLORENCE NZAMA ROAD, DURBAN

DRAWING:
DOOR SCHEDULES

DATE	REVISION	SCALE	DATE	DRAWN	CHECKED
			2015.11.03	JR	

PROJECT	DRAWING	DWG NO.	STAGE	REV.
BH	DS	7001	T	0