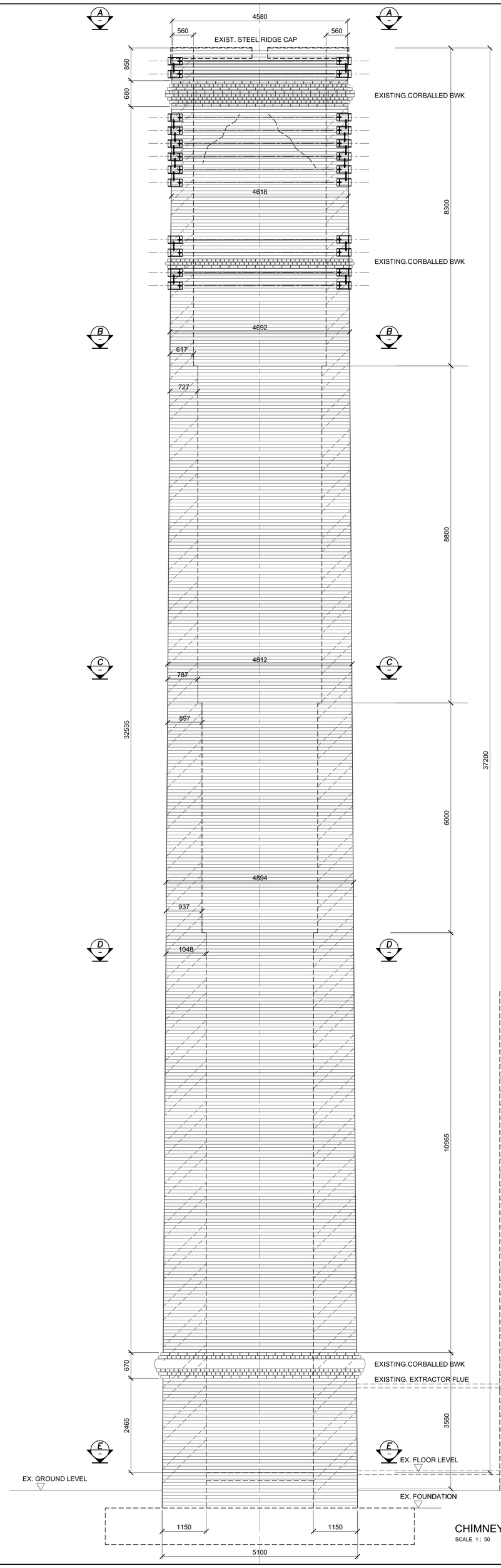

CHIMNEY STACK ELEVATION
SCALE 1 : 50

DIMENSIONS ARE PROVISIONAL-BASED ON VISUAL CALCULATIONS AND DETAILS PROVIDED IN REPORTS

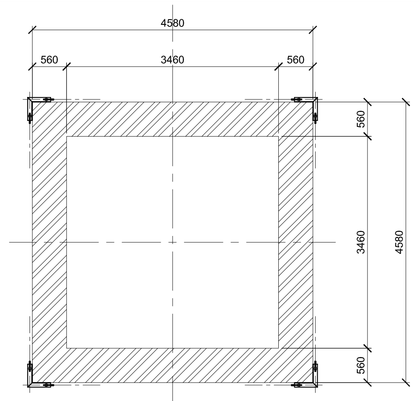

SECTION A - A
SCALE 1 : 50

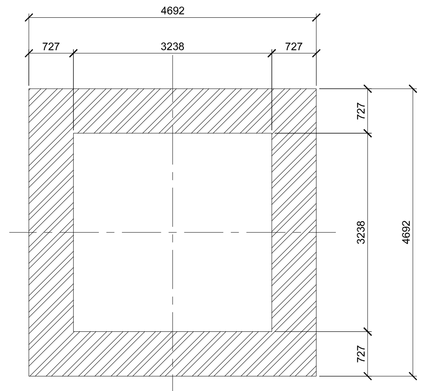

SECTION B - B
SCALE 1 : 50

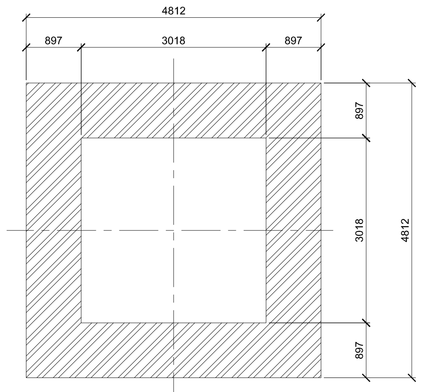

SECTION C - C
SCALE 1 : 50

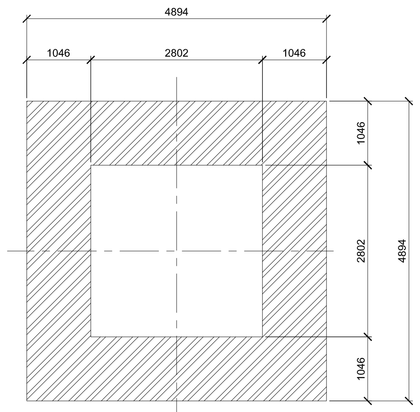

SECTION D - D
SCALE 1 : 50

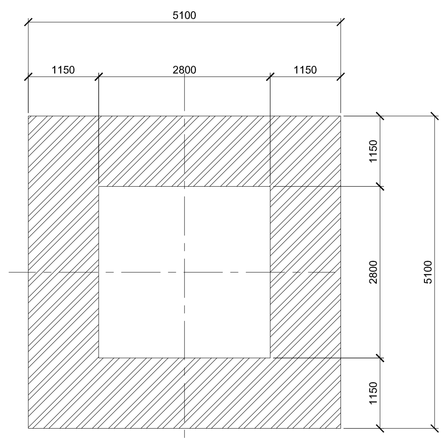

SECTION E - E
SCALE 1 : 50

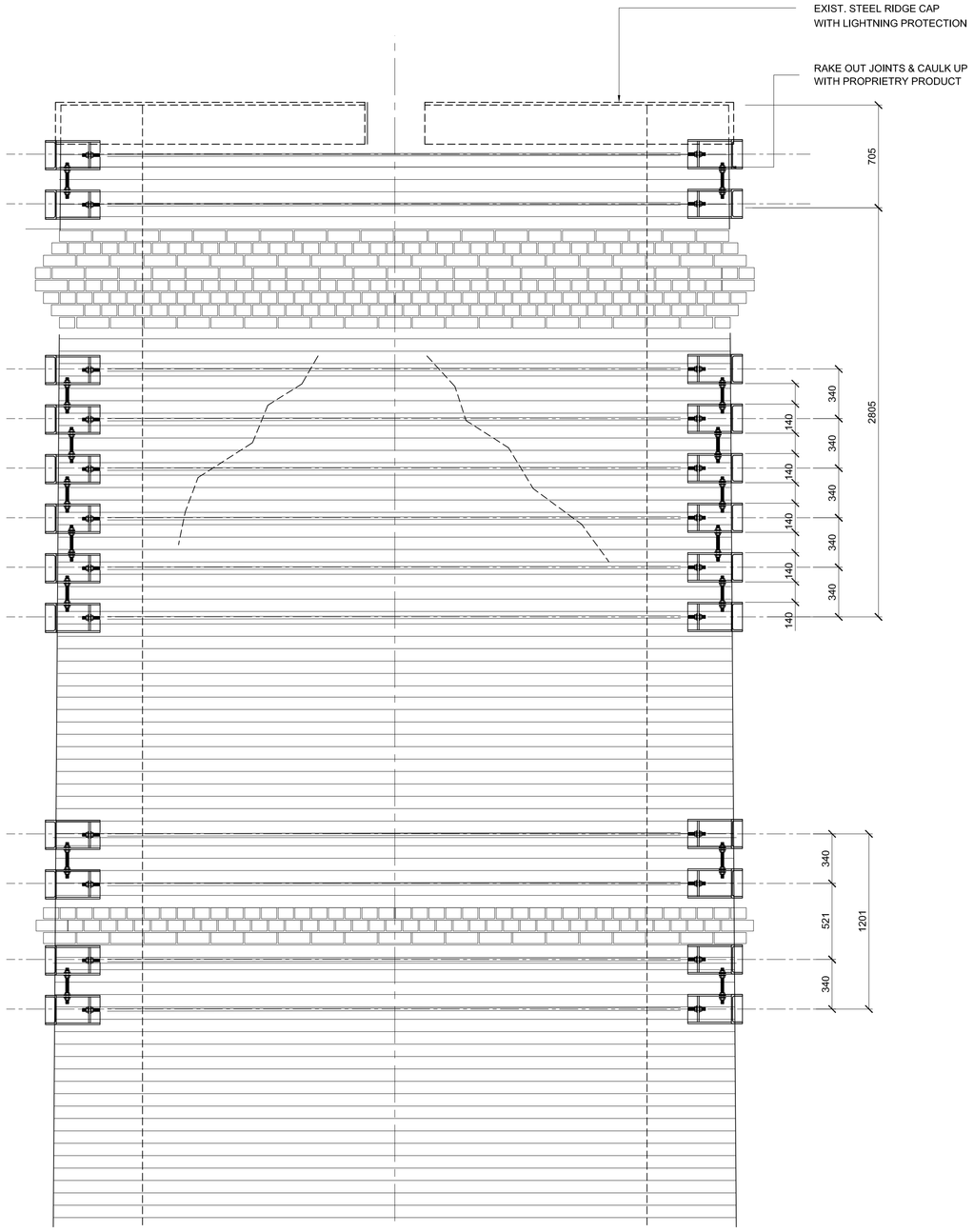

ELEVATION : STACK APEX
SCALE 1 : 5

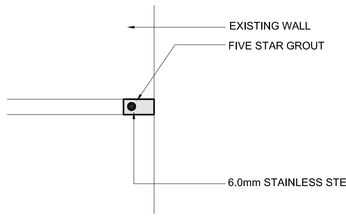

TYPICAL JOINT REPAIR
SCALE 1 : 2

CONSTRUCTION PROCEDURE:

1. CHASE INTO EXISTING JOINT, 30mm DEEP
2. CLEAN VOID THOROUGHLY.
3. INSERT BAR INTO VOID
4. FILL WITH 'PROSTRUCT 514 GROUT' OR EQUAL APPROVED GROUT

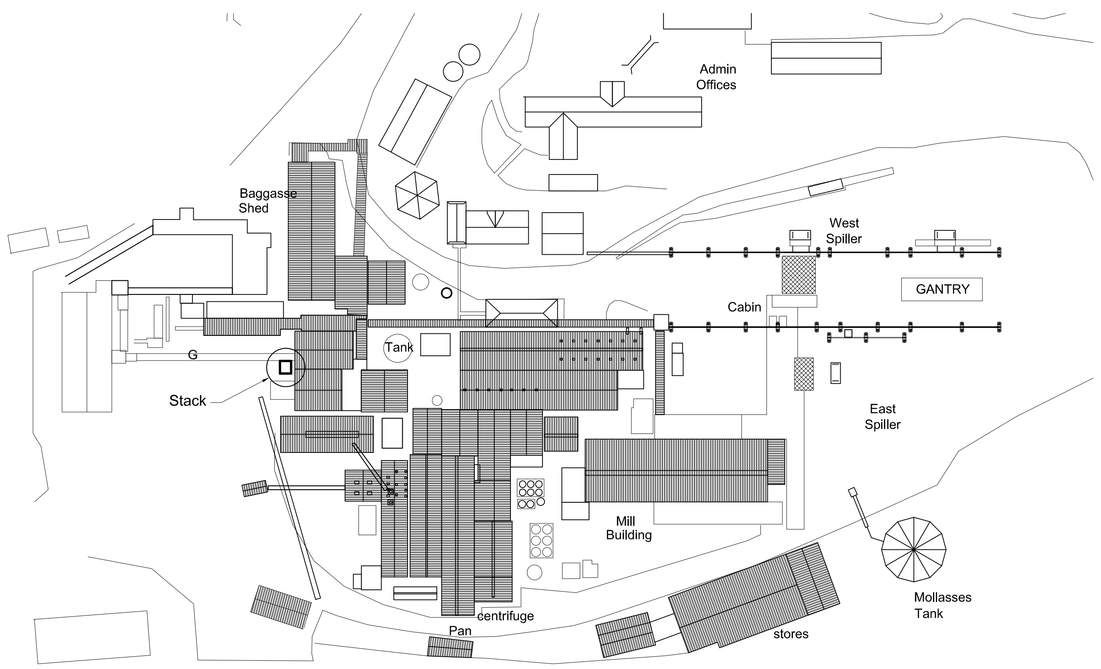

PART SITE PLAN
SCALE 1 : 1250

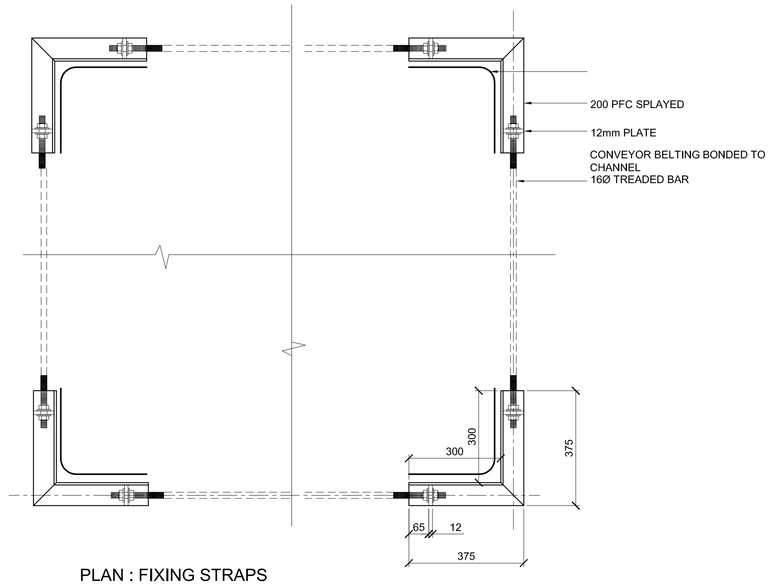

PLAN : FIXING STRAPS
SCALE 1 : 10

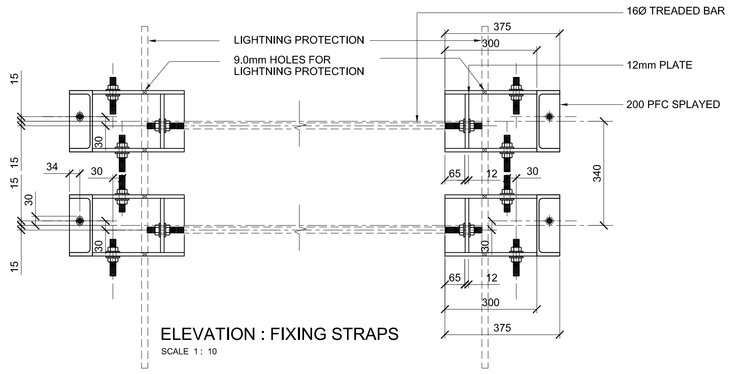

ELEVATION : FIXING STRAPS
SCALE 1 : 10

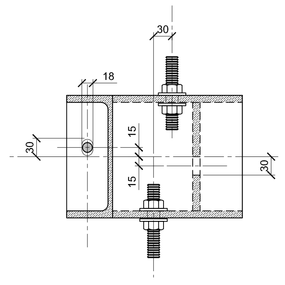

ELEVATION : TYPICAL FITTING
SCALE 1 : 5

NOTES:

1. ALL WORKMANSHIP SHALL BE IN ACCORDANCE WITH THE LATEST EDITION OF SANS 20014-CSI : 2005 CONSTRUCTION WORKS-PART CSI : STRUCTURAL STEELWORK.
2. ALL MILD STEEL MEMBERS AND BOLTS SHALL BE HOT DIP GALVANISED.
3. ALL WELDS SHALL BE 6.0mm CONTINUOUS FILLET WELDS UNLESS OTHERWISE NOTED.
4. ALL BUTT-WELDS SHALL BE FULL PENETRATION WELDS.
5. STRUCTURAL STEELWORK SHALL BE IN ACCORDANCE WITH THE FOLLOWING :
   - HOT ROLLED SECTIONS : SANS 1431 Gr. S355JR
   - HOT ROLLED STRUCTURAL TUBING : SANS 1431 Gr. 355JR
   - HOT ROLLED PLATE : SANS 1431 Gr. S355JR
   -COLLED ROLLED SECTIONS-MIN. YIELD = 225MPa.
6. ALL STEELWORK SHALL BE HOT DIP GALVANISED IN ACCORDANCE WITH ISO-1461 OR SANS 121:2011.

100mm ON ORIGINAL SCALE
0 10 20 30 40 50 60 70 80 90 100

NOTES / PROPOSED METHOD OF TEMPORARY REPAIR.

1. THE TOP OF THE STACK MUST BE INSPECTED BY THE CONTRACTOR PRIOR TO THE COMMENCEMENT OF REMEDIAL WORKS .
2. THE ENGINEERS MUST ESTABLISH THE DEPTHS OF THE CRACKS IN THE BRICKWORK, EXTENT OF DELAMINATION, CONDITION OF MORTAR JOINTS, ETC .
3. THE STEELWORK MUST BE HOT DIP GALVANISED.
4. THE EXISTING BRICK JOINTS MUST BE FILLED WITH' PROSTRUCT 514 OR EQUAL APPROVED GROUT.
5. CRACKS IN THE BRICKWORK MUST BE FIXED USING PROPOSED JOINT REPAIR DETAILS.
6. THE WORK MUST BE CARRIED OUT BY AN APPROVED REPAIR SPECIALIST.

PROJECT
PROPOSED REINSTATEMENT OF BUILDING STABILITY ILLOVIO SUGAR MILL SIZELA

LOCATION
BRICK STACK SECTIONS ELEVATIONS

ARCHITECT

P - DENOTES PRELIMINARY ISSUE
C - DENOTES CONSTRUCTION ISSUE

DATE	REV	DESCRIPTION
10-06-2020	0	ISSUED FOR CONSTRUCTION

Y+S YOUNG + SATHARIA
consulting structural and civil engineers
SUITE 3
78 JULIA ROAD
OVERPORT 4001
TELEPHONE (031)2077252
TELEFAX (031)2077259

DRAWN	M.E.M	SCALE	PLAN
DESIGNED	R.J.Y / M.E.M		
CHECKED	R.J.Y.	DATE	15.04.2020
PROJECT No. 3451		NUMBER 801	REV. C0