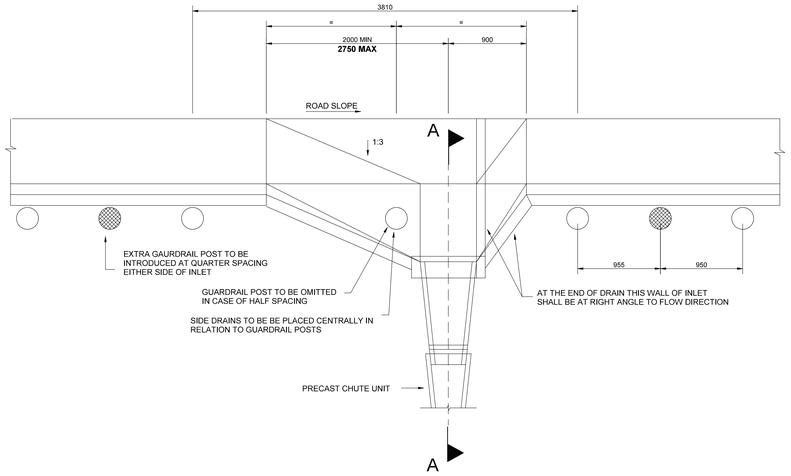

PLAN
SCALE 1:25

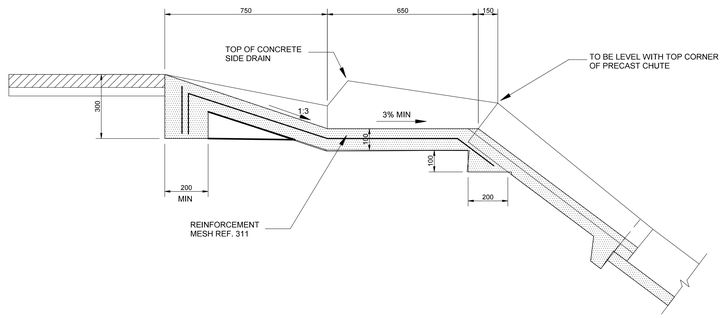

SECTION A-A
SCALE 1:10

CHUTE INLET DETAILS

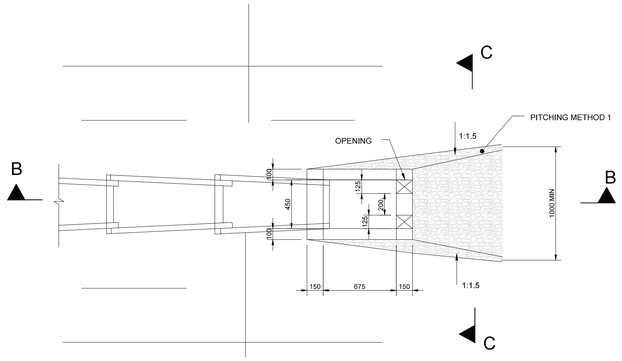

PLAN
SCALE 1:20

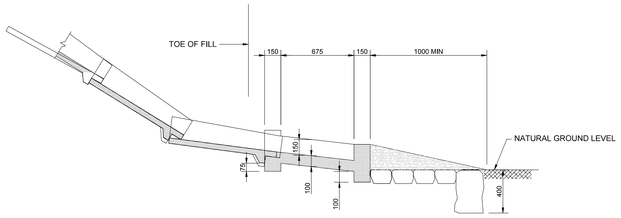

SECTION B-B
SCALE 1:20

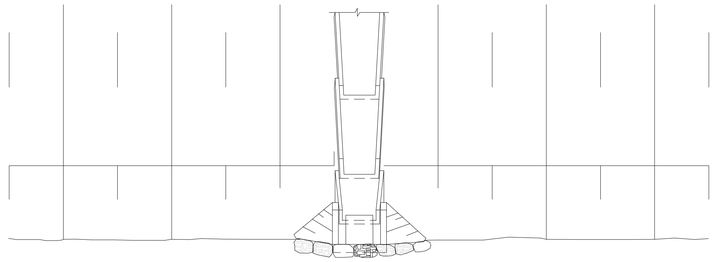

SECTION C-C
SCALE 1:20

CHUTE OUTLET DETAILS

TYPE A

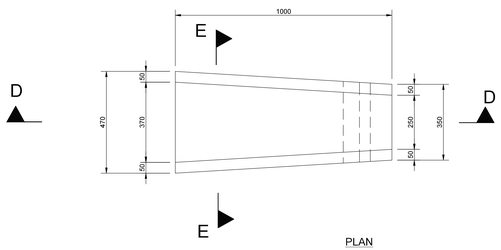

PLAN
SCALE 1:10

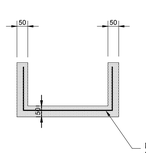

SECTION E-E
SCALE 1:10

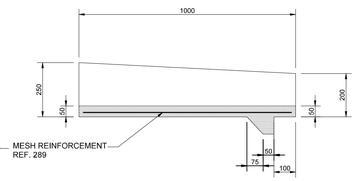

SECTION D-D
SCALE 1:10

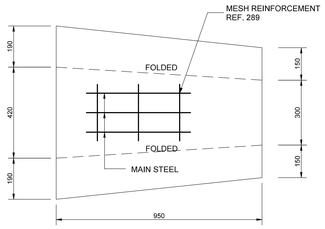

EXPANDED PLAN OF MESH
SCALE 1:10

CHUTE UNIT DETAILS

NOTES:

1. CHUTES SHALL BE SPACED AS SPECIFIED DEPENDING ON THE SITE CONDITIONS
2. ALL CAST IN-SITU CONCRETE SHALL BE CLASS 30/19 (MPa/mm)
3. HIGH TENSILE WELDED WIRE MESH SHALL COMPLY WITH THE REQUIREMENTS OF SABS 1024

No	DATUM DATE	WYSIGINGS / AMENDMENTS	nms Hoof v. Dept. for Head of Dept.	DATUM DATE
AA	18-12-2012	For Approval		

SURVEYED BY: LIDAR SURVEY RECEIVED NOVEMBER 2011 FROM XSTRATA

HANDTEK / SIGNTR. DATUM / DATE

ONTWERP VIR / DESIGNED FOR: TWEEFONTEIN PROJECT, XSTRATA COAL SA

ONTWERP DEUR / DESIGNED BY: JEFFARES & GREEN PTY (Ltd), ENGINEERING AND ENVIRONMENTAL CONSULTING
TEL. (012) 349-7900, FAX. (012) 349-7979, E-MAIL jgpma@jgi.co.za, P.O. BOX 2973 PRETORIA 0001

ONTWERP GOEDGEKEUR DESIGN APPROVED: nms Raadgewende Ingenieur for Consulting Engineers — DATUM/DATE:

GOEDGEKEUR DEUR APPROVED BY: nms Hoof van Departement for Head of Department — DATUM/DATE:

ONTWERP DEUR DESIGNED BY	JN
NAGESIEN DEUR CHECKED BY	CCLR
GETEKEN DEUR DRAWN BY	LN
NAGESIEN DEUR CHECKED BY	CCLR

MPUMALANGA REGERING / OPENBARE WERKE, PAAIE EN VERVOER — MPUMALANGA — MPUMALANGA GOVERNMENT / PUBLIC WORKS, ROADS AND TRANSPORT

REALIGNMENT OF PROVINCIAL ROADS

TYPICAL CHUTE DETAILS

SKAAL / SCALE: AS SHOWN

LÊER Nr / FILE No: --

TIPE ONTWERP / TYPE OF PLANNING: PRELIMINARY DESIGN

DISTRIK / DISTRICT: NKANGALA

PAD Nr / ROAD No: P141-1 & D2769

PROVINSIE PLAN Nr / PROVINCE PLAN No: MRS 06/--/7

XSTRATA COAL PLAN Nr / PLAN No: TOP-J&G-5003-CV-01-1407

PROVINCE PLAN No: MRS 06/--/7

XSTRATA COAL PLAN No: TOP-J&G-5003-CV-01-1407

W:\002398 - Tweefontein Re-alignment (CC le Roux)\03 Drawings\Working Drawings\Alternative 2012\Preliminary Design\Rev A\B\AutoCAD\Typicals

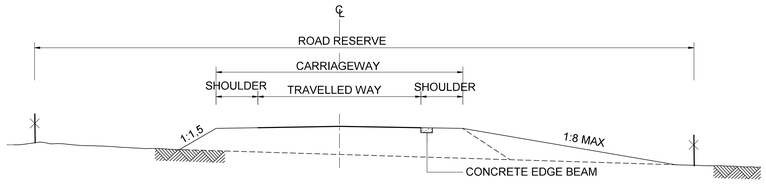

SECTION A-A

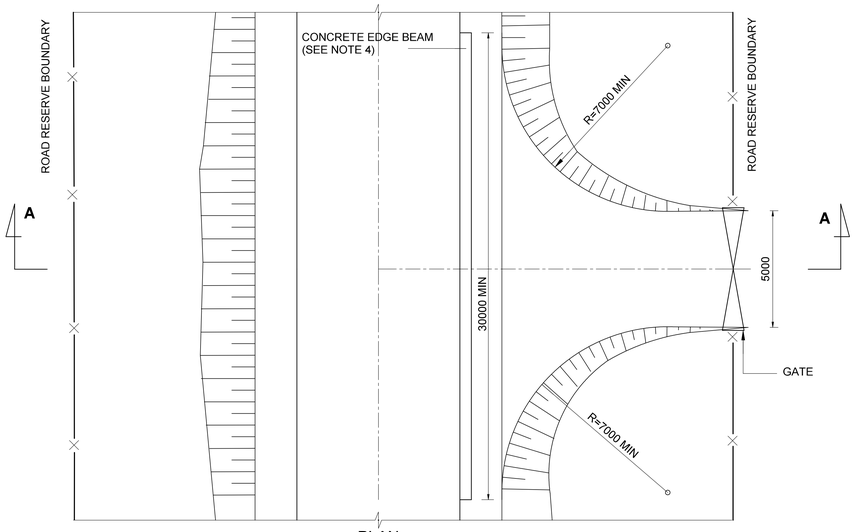

PLAN

FARM ROAD JUNCTION WITH ROAD IN FILL

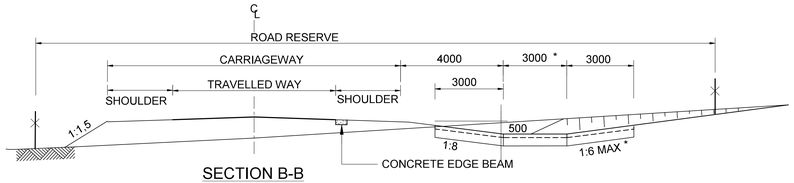

SECTION B-B

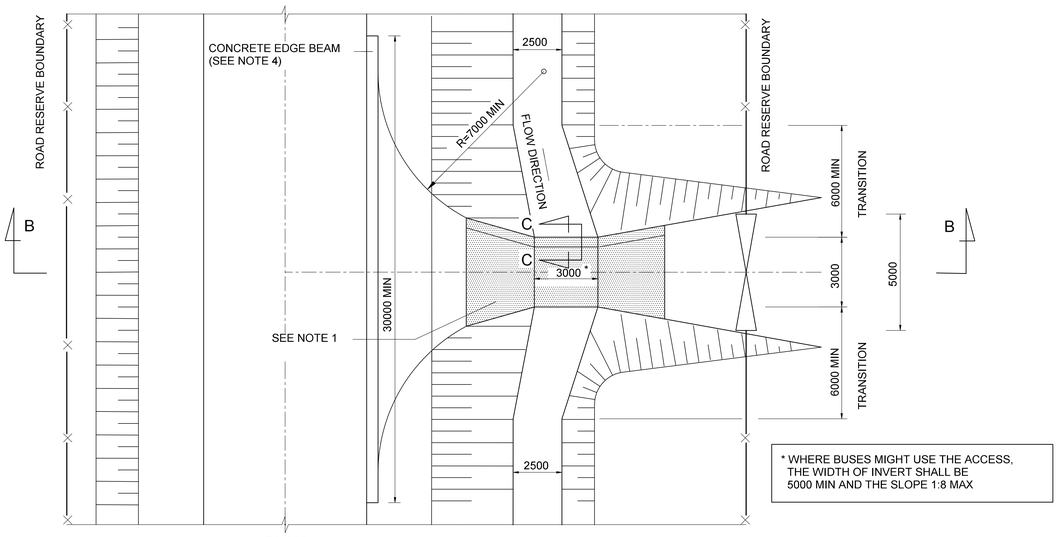

PLAN

FARM ROAD JUNCTION WITH DRIFT

* WHERE BUSES MIGHT USE THE ACCESS, THE WIDTH OF INVERT SHALL BE 5000 MIN AND THE SLOPE 1:8 MAX

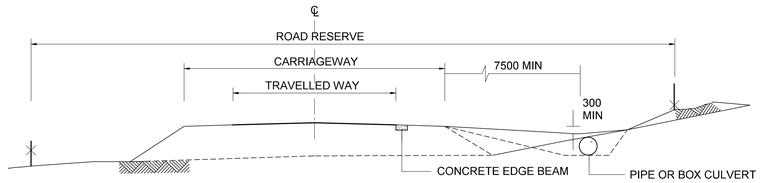

SECTION D-D

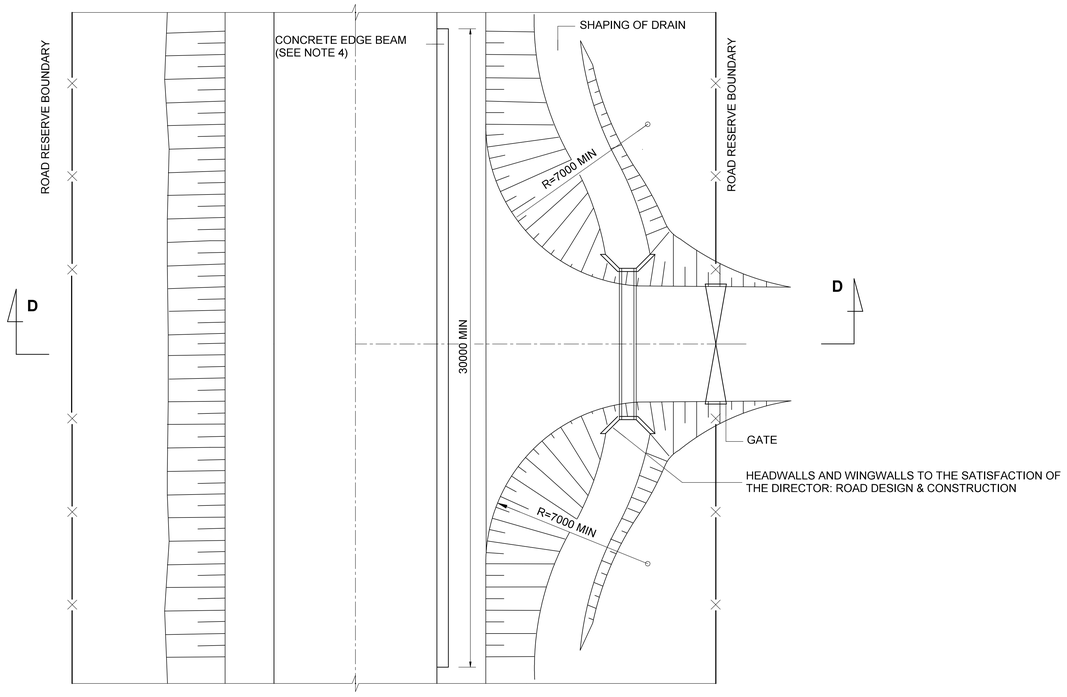

PLAN

ALTERNATIVE : FARM ROAD JUNCTION WITH PIPE OR BOX CULVERT

(SEE NOTE 3)

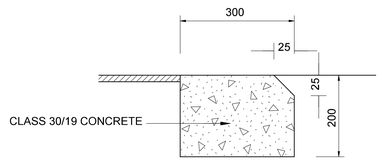

DETAIL OF CONCRETE EDGE BEAM

(SEE NOTE 5)

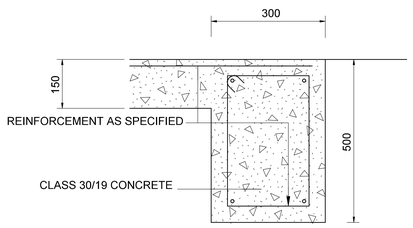

SECTION C-C

(FOR USE IN CONCRETE)

NOTES:

1. USE CONCRETE, STONE PITCHING, GABION MATTRESSES OR OTHER SUITABLE MATERIAL TO PROTECT A DRIFT, WHERE NECESSARY. PROTECTION OF THE FULL ACCESS IS ONLY TO BE CONSIDERED IN EXCEPTIONAL CASES.
2. WHEN CONCRETE IS USED, A 300x500 CONCRETE BEAM SHALL PROTECT THE FLOOR EDGES OF THE DRIFT AGAINST SCOURING. SEE SECTION C-C FOR DETAIL.
3. THE ALTERNATIVE WITH A PIPE OR BOX CULVERT SHALL BE USED ONLY WHEN THE EXCAVATION BECOMES TOO DEEP FOR A DRIFT, OR WHERE DRAINAGE IS REQUIRED IN A FILL.
4. WHERE UNRAVELLING OF TARRED EDGES MAY BE EXPECTED, THE CONCRETE BEAM SHALL BE CONSTRUCTED AS INDICATED.
5. CONCRETE EDGE BEAM MUST BE PROVIDED WITH A SHRINKAGE JOINT EVERY 2m AND AN EXPANSION JOINT EVERY 10m.

No	DATUM DATE	WYSIGINGS / AMENDMENTS	nms Hoof v. Dept. for Head of Dept.	DATUM DATE
AA	18-12-2012	For Approval		

SURVEYED BY: LIDAR SURVEY RECEIVED NOVEMBER 2011 FROM XSTRATA

HANDTEK / SIGNTR. DATUM / DATE

ONTWERP VIR / DESIGNED FOR: TWEEFONTEIN PROJECT XSTRATA COAL SA

ONTWERP DEUR / DESIGNED BY: JEFFARES & GREEN PTY (Ltd) ENGINEERING AND ENVIROMENTAL CONSULTING
TEL. (012) 349-7900 FAX. (012) 349-7979 E-MAIL jgjpta@jgi.co.za
P.O. BOX 2973 PRETORIA 0001

ONTWERP GOEDGEKEUR DESIGN APPROVED: nms Raadgewende Ingenieur for Consulting Engineers — DATUM/DATE:

GOEDGEKEUR DEUR APPROVED BY: nms Hoof van Departement for Head of Department — DATUM/DATE:

ONTWERP DEUR DESIGNED BY	JN	
NAGESIEN DEUR CHECKED BY	CCLR	
GETEKEN DEUR DRAWN BY	LN	
NAGESIEN DEUR CHECKED BY	CCLR	

MPUMALANGA REGERING OPENBARE WERKE, PAWE EN VERVOER — MPUMALANGA — MPUMALANGA GOVERNMENT PUBLIC WORKS, ROADS AND TRANSPORT

REALIGNMENT OF PROVINCIAL ROADS

TYPICAL FARM ROAD JUNCTION

SKAAL / SCALE	LÊER Nr / FILE No	DISTRIK / DISTRICT	PROVINSIE PLAN Nr / PROVINCE PLAN No
NTS	–	NKANGALA	MTP 3/1
	TIPE ONTWERP / TYPE OF PLANNING: PRELIMINARY DESIGN	PAD Nr / ROAD No: P141-1 & D2769	XSTRATA COAL PLAN Nr / PLAN No: TOP-J&G-5003-CV-01-1408

PROVINCE PLAN No: MTP 3/1
XSTRATA COAL PLAN No: TOP-J&G-5003-CV-01-1408

W:\002398 - Tweefontein Re-alignment (CC le Roux)\03 Drawings\Working Drawings\Alternative 2012\Preliminary Design\Rev A\B\AutoCAD\Typicals

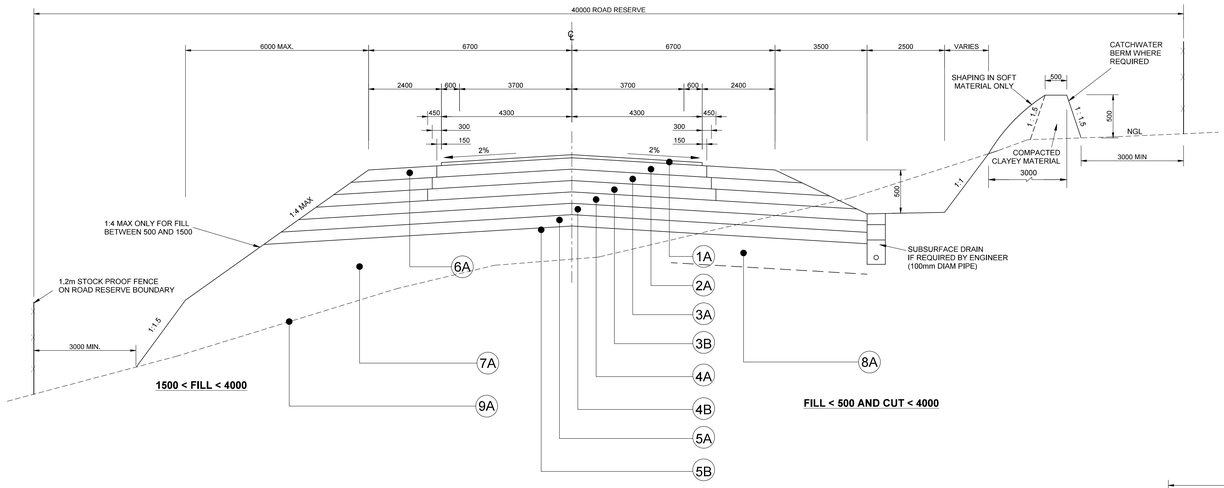

1500 < FILL < 4000

FILL < 500 AND CUT < 4000

TYPICAL CROSS-SECTION OF NEW ALIGNMENT OF PROVINCIAL ROADS (D2257 & D2769)

40m ROAD RESERVE

N.T.S.

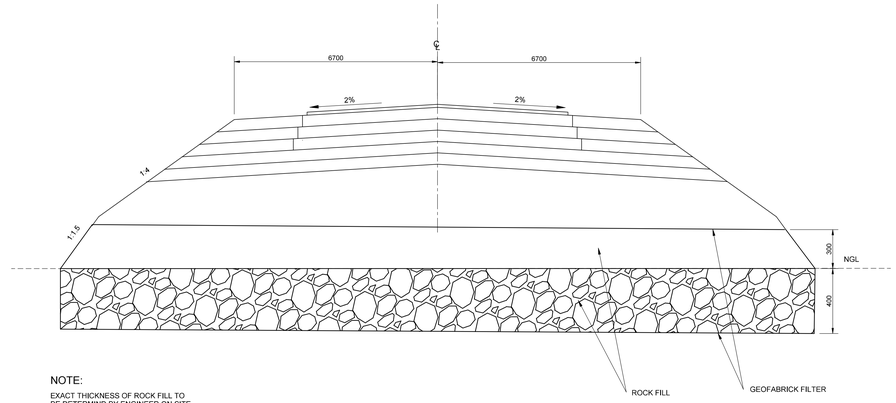

NOTE:

EXACT THICKNESS OF ROCK FILL TO BE DETERMIND BY ENGINEER ON SITE

TYPICAL CROSS-SECTION - ROCK FILL AREAS (IF REQUIRED)

N.T.S.

LAYERWORKS DESCRIPTION (ROAD P141-1 & D2769)

- 1A DOUBLE SEAL SURFACING / 40mm ASPHALT 19mm AND 9.5mm
- 2A 150mm G1, CRUSHED STONE BASE COMPACTED TO 88% OF APPARENT RELATIVE DENSITY
- 3A 150mm CEMENT STABILISED UPPER SUBBASE (C4) 1000 KPa @ 95%, COMPACTED TO 95% MOD AASHTO DENSITY, GM>1.5, PI<6
- 3B 150mm CEMENT STABILISED LOWER CUBBAS (C4) 750 kPa @ 95%, COMPACTED TO 95% MOD AASHTO GM>1.5, PI=6
- 4A 150mm UPPER SELECTED SUBGRADE (G6) CBR 20 @ 95%, COMPACTED TO 95% MOD AASHTO
- 4B 150mm LOWER SELECTED SUBGRADE (G7) CBR 15 @ 93%, COMPACTED TO 93% MOD AASHTO
- 5A 150mm UPPER SELECTED SUBGRADE (G9) CBR 7 IN-SITU DENSITY, COMPACTED TO 95% MOD AASHTO
- 5B 150mm LOWER SELECTED SUBGRADE (G10) CBR 10IN-SITU DENSITY, COMPACTED TO 93% MOD AASHTO
- 6A 150mm GRAVEL SHOULDER CBR 20 @ 93%, COMPACTED TO 93% MOD AASHTO, GM>0.75, PI<3GM+10
- 7A 150mm FILL LAYERS (G10) CBR 3 @ 90/100%, COMPACTED TO 90% MOD AASHTO.
- 8A UNDERCUT TO 1m BELOW FRL WHERE UNSUITABLE MATERIAL IS ENCOUNTERED AND REPLACE WITH A PIONEER LAYER.
- 9A IMPACT ROLLING AND/OR ROADBED PREPARATION TO A 150mm DEPTH AS INSTRUCTRED.

NOTES:

1. REFER TO STANDARD SPECIFICATIONS FOR ADDITIONAL REQUIREMENTS FOR FILL AND PAVEMENT LAYERS

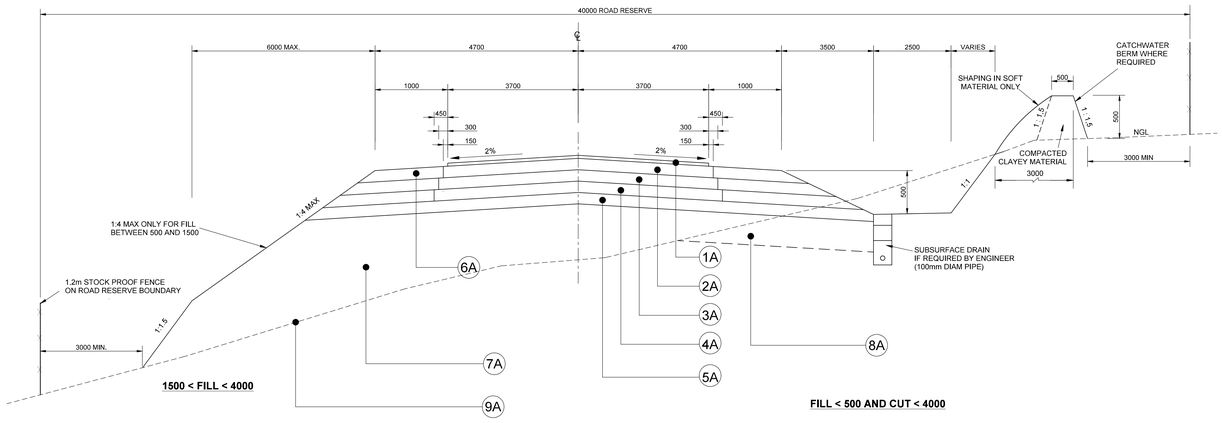

1500 < FILL < 4000

FILL < 500 AND CUT < 4000

TYPICAL CROSS-SECTION OF MIA ACCESS ROAD

40m ROAD RESERVE

N.T.S.

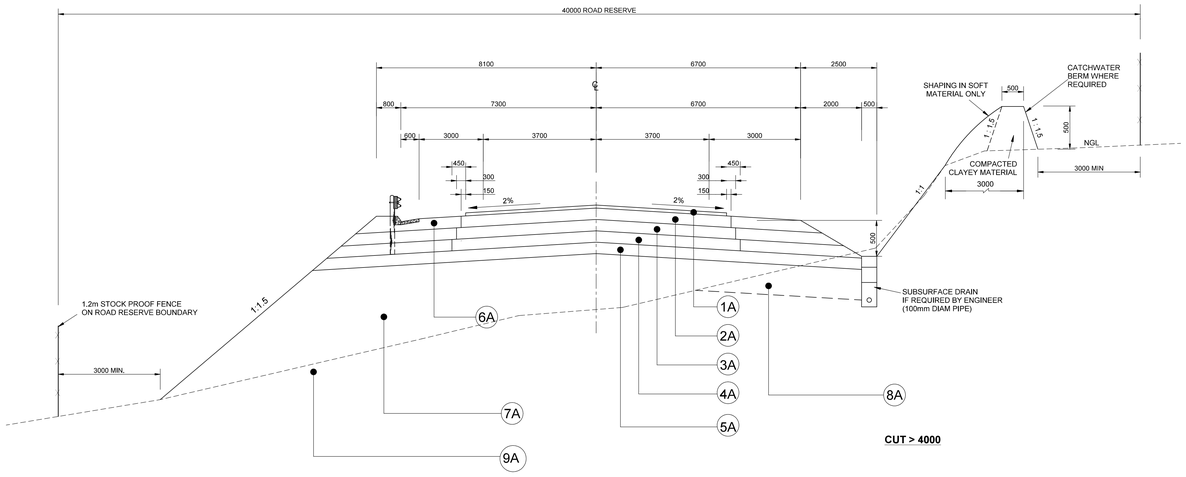

4000 < FILL < 10000

CUT > 4000

TYPICAL CROSS-SECTION OF NEW ALIGNMENT OF PROVINCIAL ROADS (D2257 & D2769)

40m ROAD RESERVE

N.T.S.

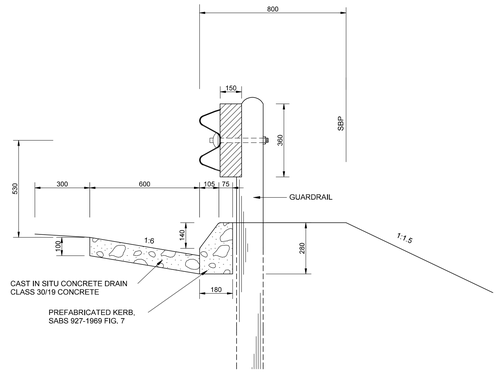

DETAIL OF CONCRETE DRAIN

N.T.S.

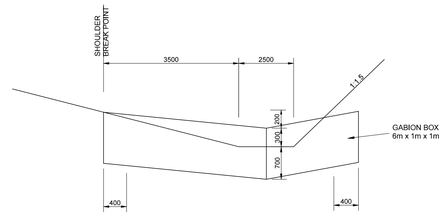

NOTE:
PLACE BOX SUCH THAT MIDDLE IS 200mm LOWER THAN ENDS
REFER TO LONGITUDINAL SECTIONS FOR POSITIONS

EROSION PROTECTION OF SIDE DRAIN

N.T.S.

NOTE:

TRAFFIC COUNTS AND PAVEMENT DESIGN TO BE VERIFIED PRIOR TO DETAIL DESIGN.

No	DATUM DATE	WYSIGINGS / AMENDMENTS	DRAWN	CHECKED	APPROVED
AA	18-12-2012	For Approval			

SURVEYED BY: LIDAR SURVEY NOVEMBER 2011 PROVIDED BY XSTRATA

HANDTEK / SIGNTR. DATUM / DATE

ONTWERP VIR / DESIGNED FOR: XSTRATA COAL SA

ONTWERP DEUR / DESIGNED BY: JEFFARES & GREEN PTY (Ltd) ENGINEERING AND ENVIRONMENTAL CONSULTING
TEL. (012) 460-2008 FAX. (012) 460-2053 E-MAIL jgptla@jgi.co.za
P.O. BOX 2973 PRETORIA 0001

ONTWERP GOEDGEKEUR DESIGN APPROVED: PR 980444 nms Raadgewende Ingenieur for Consulting Engineers — DATUM/DATE:

GOEDGEKEUR DEUR APPROVED BY: nms Hoof van Departement for Head of Department — DATUM/DATE:

ONTWERP DEUR DESIGNED BY	JN
NAGESIEN DEUR CHECKED BY	JN
GETEKEN DEUR DRAWN BY	LN
NAGESIEN DEUR CHECKED BY	CCLR

MPUMALANGA REGERING OPENBARE WERKE, PAANE EN VERVOER — MPUMALANGA — MPUMALANGA GOVERNMENT PUBLIC WORKS, ROADS AND TRANSPORT

RE-ALIGNMENT OF PROVINCIAL ROADS

TYPICAL CROSS SECTION AND PAVEMENT DESIGN

SKAAL / SCALE	LÊER Nr / FILE No	DISTRIK / DISTRICT	PROVINSIE PLAN Nr / PROVINCE PLAN No
N.T.S.	--	NKANGALA	MRS 06/---/Ds
	TIPE ONTWERP / TYPE OF PLANNING: PRELIMINARY DESIGN	PAD Nr / ROAD No: MIA ACCESS	XSTRATA COAL PLAN Nr / PLAN No: TOP-J&G-5003-CV-01-1400

PROVINCE PLAN No: MRS 06/---/Ds
ANGLO AMERICAN PLAN No: TOP-J&G-5003-CV-01-1400

W1002598 - Tweefontein Re-alignment (DC & Roux)\03 Drawings\Working Drawings\Alternative 2012\Preliminary Design\Rev A8

WARNING SIGN DETAILS

P141-1 & D2769			
SIGN	CODE	SIZE	No. OFF
40	R201-40	1200	2
80	R201-80	1200	2
60	R201-60	1200	2
100	R201-100	1200	2
	TR214	1200	2
END THANK YOU	TW336 TIN 11.4	1500 1500	2
600m	TW336 TIN 11.3	1500 1500	2
200 m	TW208 TIN 11.3	1500 1500	2
	TR104	1200	10
	TW411	2400 X 400	8
	TW402	600 x 150	33
	TW401	600 x 150	33

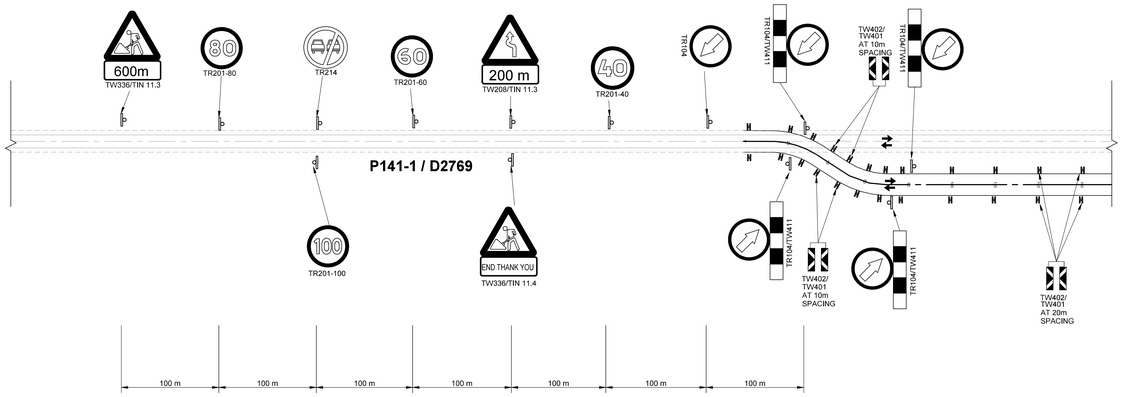

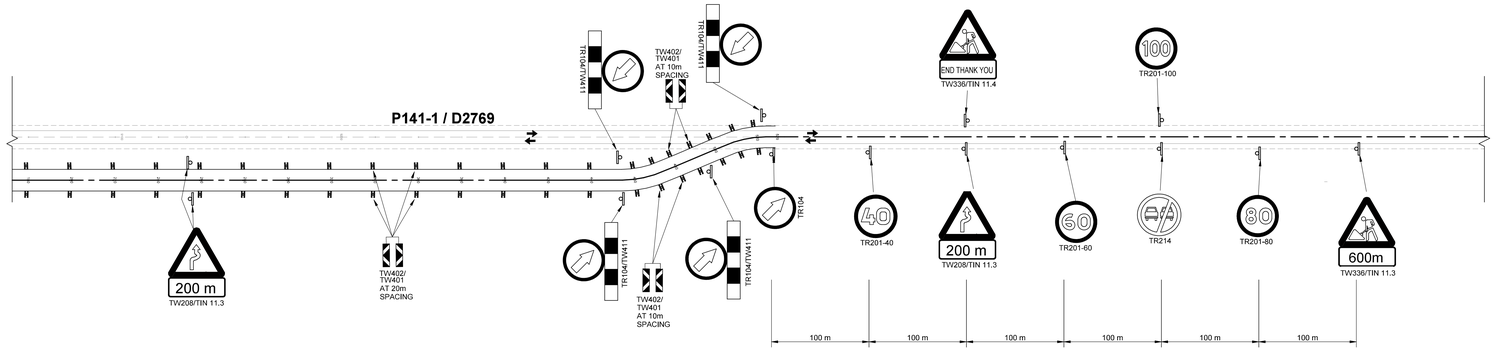

DEVIATION

N.T.S.

NOTE:

REFER TO "SOUTH AFRICAN ROAD TRAFFIC SIGNS MANUAL"
VOLUME 2, CHAPTER 13 FOR DETAIL

No	DATUM DATE	WYSIGINGS / AMENDMENTS	nms Hoof v. Dept. for Head of Dept.	DATUM DATE
AA	18-12-2012	FOR APPROVAL		

SURVEYED BY: LIDAR SURVEY NOVEMBER 2011 FROM XSTRATA

HANDTEK / SIGNTR. DATUM / DATE

ONTWERP VIR / DESIGNED FOR: TWEEFONTEIN PROJECT XSTRATA COAL SA

ONTWERP DEUR / DESIGNED BY: JEFFARES & GREEN PTY (Ltd) ENGINEERING AND ENVIRONMENTAL CONSULTING
TEL. (012) 349-7900 FAX. (012) 349-7979 E-MAIL jgpta@jg.co.za
P.O. BOX 2973 PRETORIA 0001

ONTWERP GOEDGEKEUR DESIGN APPROVED
nms Raadgewende Ingenieur for Consulting Engineers
DATUM/DATE:

GOEDGEKEUR DEUR APPROVED BY
nms Hoof van Departement for Head of Department
DATUM/DATE:

ONTWERP DEUR DESIGNED BY	JN
NAGESIEN DEUR CHECKED BY	CCLR
GETEKEN DEUR DRAWN BY	SDL
NAGESIEN DEUR CHECKED BY	CCLR

MPUMALANGA REGERING OPENBARE WERKE, PAAIE EN VERVOER — MPUMALANGA — MPUMALANGA GOVERNMENT PUBLIC WORKS, ROADS AND TRANSPORT

REALIGNMENT OF PROVINCIAL ROADS

TYPICAL TEMPORARY BYPASS

SKAAL / SCALE: NTS

LÊER Nr / FILE No: --

TIPE ONTWERP / TYPE OF PLANNING: PRELIMINARY DESIGN

DISTRIK / DISTRICT: NKANGALA

PAD Nr / ROAD No: P141-1 & D2769

PROVINSIE PLAN Nr / PROVINCE PLAN No: MRS 06/--/09

XSTRATA COAL PLAN Nr / PLAN No: TOP-J&G-5003-CV-01-1406

W:\002398 - Tweefontein Re-alignment (CC le Roux)\03 Drawings\Working Drawings\Alternative 2012\Preliminary Design\Rev A\B\2398JN_TOP-J&G-5003-CV-01-1406.DR4

PROVINCE PLAN No MRS 06/--/09
XSTRATA COAL PLAN No TOP-J&G-5003-CV-01-1406

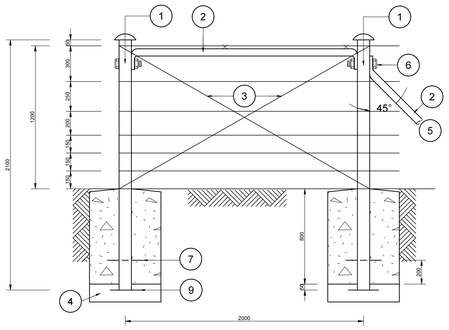

CORNER POST

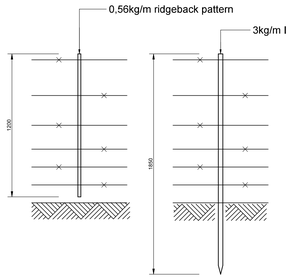

STRAINING POST

DROPPER

(3,5m c/c maxs)

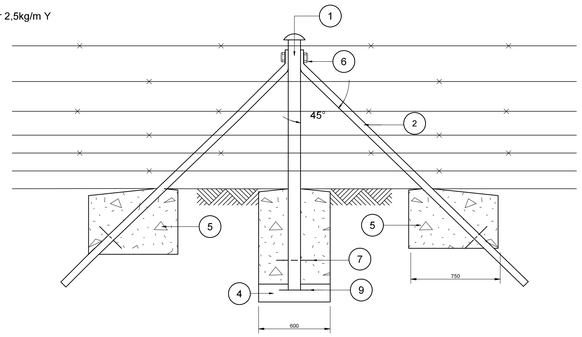

STANDARD

(17,5m c/c maxs)

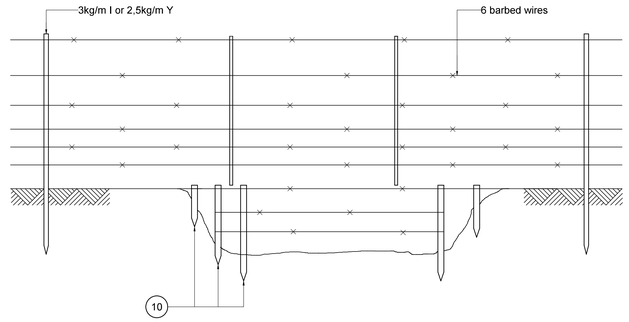

STRAINING POST

(455m c/c max)

ACROSS CHANNELS AND TRENCHES

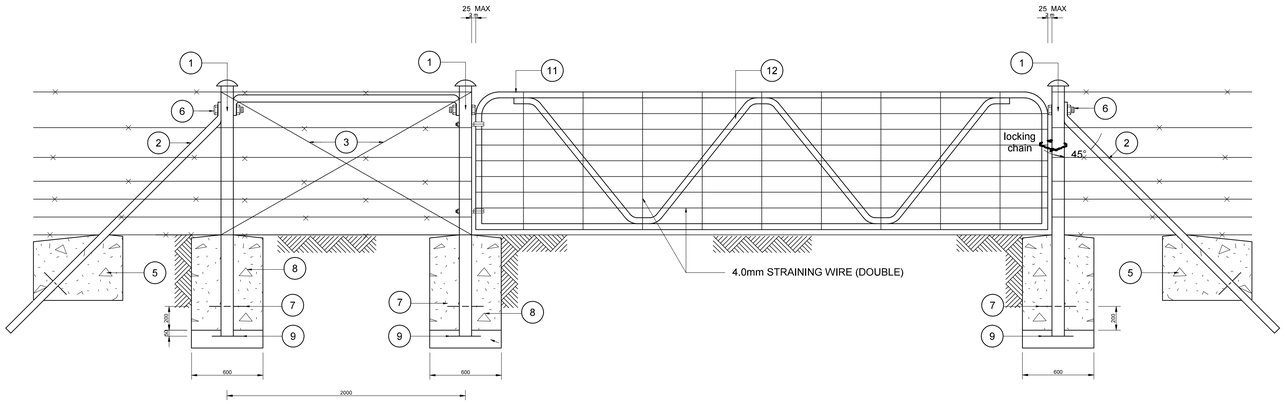

STRAINING POST **GATE POST** **GATE**

(4,8m x 1,15m)

STRAINING POST

LEGEND

1	101.6mm outside dia. steel pipe, wall thickness 2,95mm or 15 kg/m rail. (Rail is not suitable for gate post).
2	60, 33mm outside dia. steel pipe, wall thickness 2,95mm.
3	6-cord straining wire.
4	150mm gravel for drainage underneath concrete.
5	See detail A.
6	12mm dia. steel bolt.
7	10mm dia. x 300mm anchor pin.
8	Class 15/38 concrete.
9	230mm x 230mm x 6mm footplate with 40mm dia. opening.
10	Standards to suit ground.
11	42,86mm outside dia. steel pipe, wall thickness 2, 64mm.
12	21,43mm outside dia. steel pipe, wall thickness 2, 03mm.

GENERAL NOTES

1. OTHER FENCING TYPES MUST BE SUBMITTED TO THE DIRECTOR: ROAD DESIGN AND CONSTRUCTION / LIAISON ENGINEER FOR APPROVAL.
2. REFER TO MPUMALANGA : DIRECTORATE NATURE CONSERVATION FOR STANDARDS AND SPECIFICATIONS CONCERNING GAME PROOF FENCING DETAILS.

STOCK-PROOF FENCE 1.2m

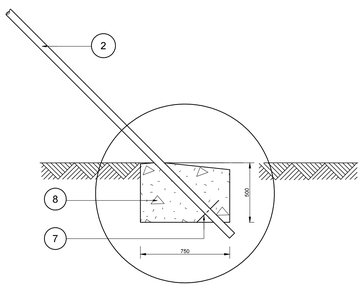

DETAIL "A"

NOTES:

1. ALL POSTS ARE TO BE SEALED BY WELDING A STEEL CAP OVER THE OPENING AT THE TOP.
2. 3kg/m I SECTION STANDARDS MAY BE USED INSTEAD OF 2,5kg/m Y SECTION STANDARDS.
3. CONCRETE MUST HAVE BEVELLED EDGES.
4. **BOUNDARY BEACONS** CONSISTING OF HALVED IRON STANDARDS IN CONCRETE OR WITHOUT CONCRETE **MAY NOT BE TAMPERED WITH**
5. BOUNDARY BEACONS CONSISTING OF WOODEN PEGS IN CONCRETE OR WITHOUT CONCRETE MAY BE REPLACED BY A CORNER POST AND TWO STRAINING POSTS.
6. **CADASTRAL BEACONS** **MAY NOT BE TAMPERED WITH** UNDER **ANY** CIRCUMSTANCES.

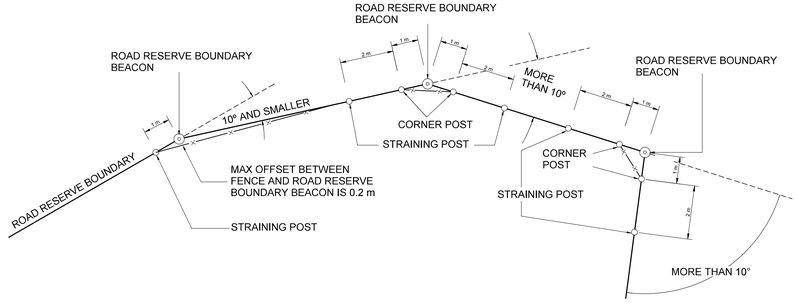

DIAGRAM FOR FENCING AT ROAD RESERVE BOUNDARY BEACONS

N.T.S.

REFERENCE DRAWINGS		TITLE	SIGNATURE	TITLE	SIGNATURE
DRG No.	DESCRIPTION	MECHANICAL		DRAWN BY	
		PROCESS		CHECK BY	
		PIPING		MANAGER ENGINEERING	
		CIVIL		TECHNICAL PROJECT MANAGER	
		STRUCTURAL		AREA MANAGER	
		ELECTRICAL/INSTRUMENTATION		CLIENT	

No	DATUM DATE	WYSIGINGS / AMENDMENTS	DRAWN	CHECKED	APPROVED
AA	18/12/2012	For Approval			

SURVEYED BY: LIDAR SURVEY RECEIVED NOVEMBER 2011 FROM XSTRATA

HANDTEK / SIGNTR. DATUM / DATE

ONTWERP VIR / DESIGNED FOR: XSTRATA COAL SA

ONTWERP DEUR / DESIGNED BY: JEFFARES & GREEN PTY (Ltd) ENGINEERING AND ENVIRONMENTAL CONSULTING
TEL. (012) 349-7900 FAX. (012) 349-7979 E-MAIL jgjpta@jgi.co.za
P.O. BOX 2973 PRETORIA 0001

ONTWERP GOEDGEKEUR DESIGN APPROVED: PR 980444 nms Raadgewende Ingenieur for Consulting Engineers — DATUM/DATE:

GOEDGEKEUR DEUR APPROVED BY: nms Hoof van Departement for Head of Department — DATUM/DATE:

ONTWERP DEUR DESIGNED BY	JN
NAGESIEN DEUR CHECKED BY	JN
GETEKEN DEUR DRAWN BY	LN
NAGESIEN DEUR CHECKED BY	CCLR

MPUMALANGA REGERING OPENBARE WERKE, PAAIE EN VERVOER — MPUMALANGA — MPUMALANGA GOVERNMENT PUBLIC WORKS, ROADS AND TRANSPORT

RE-ALIGNMENT OF PROVINCIAL ROADS

TYPICAL STOCK PROOF FENCE DETAILS 1.2m

SKAAL / SCALE: N.T.S.

LÊER Nr / FILE No: --

TIPE ONTWERP / TYPE OF PLANNING: PRELIMINARY DESIGN

DISTRIK / DISTRICT: Nkangala

PAD Nr / ROAD No: P141-1 & D2769

PROVINSIE PLAN Nr / PROVINCE PLAN No: MTP 11/2

ANGLO AMERICAN PLAN Nr / PLAN No: TOP-JGI-5003-CV-01-1410

REV: AA

PROVINCE PLAN No: MTP 11/2

ANGLO AMERICAN PLAN No: TOP-JGI-5003-CV-01-1410

W:\002398 - Tweefontein Re-alignment (CC to Rhus)\03 Drawings\Working Drawings\Alternative 2012\Preliminary Design\Rev A\Rhus\CAD-T.dwg\ab

ROAD No.: P141-1 & D2769

DESCRIPTION OF PROJECT :TWEEFONTEIN RE-ALIGNMENT

CONTRACT No.:

ITEM No.	DESCRIPTION OF SERVICE	PLAN No.	DESIGN km. DISTANCE	PROVINCE km. POST DISTANCE	OWNER	TIME OF MOVING / INSTALLING / PROTECTION	WORK TO BE DONE BY	ESTIMATED COST OF PROPOSED WORK	ESTIMATED TIME REQUIRED	EXISTING WAYLEAVE		NEW WAYLEAVE		REMARKS
										REFERENCE No.	DATE	REFERENCE No.	DATE	
	TELKOM (T)													
T1	NONE													
	ESCOM (P)													
P1	OVERHEAD POWERLINE CROSSING	MRS 06/--/05Lyn	P141-1: km 4.615		ESCOM	PRIOR TO CONSTRUCTION	OTHERS							XSTRATA TO MAKE ARRANGEMENTS FOR RELOCATION OF PROJECT WIDE SERVICES.
			P141-1: km 4.922		ESCOM	PRIOR TO CONSTRUCTION	OTHERS							XSTRATA TO MAKE ARRANGEMENTS FOR RELOCATION OF PROJECT WIDE SERVICES.
		MRS 06/--/06Lyn	P141-1: km 5.363		ESCOM	PRIOR TO CONSTRUCTION	OTHERS							XSTRATA TO MAKE ARRANGEMENTS FOR RELOCATION OF PROJECT WIDE SERVICES.
			P141-1: km 5.364		ESCOM	PRIOR TO CONSTRUCTION								
		MRS 06/--/07Lyn	P141-1: km 6.585		ESCOM	PRIOR TO CONSTRUCTION	OTHERS							XSTRATA TO MAKE ARRANGEMENTS FOR RELOCATION OF PROJECT WIDE SERVICES.
		MRS 06/--/09Lyn	D2769: km 0.081		ESCOM	PRIOR TO CONSTRUCTION	OTHERS							XSTRATA TO MAKE ARRANGEMENTS FOR RELOCATION OF PROJECT WIDE SERVICES.
		MRS 06/--/10Lyn	D2769: km 1.221		ESCOM	PRIOR TO CONSTRUCTION	OTHERS							XSTRATA TO MAKE ARRANGEMENTS FOR RELOCATION OF PROJECT WIDE SERVICES.
	WATER (W)													
W1	SFF PIPELINE													

No	DATUM DATE	WYSIGINGS / AMENDMENTS	nms Hoof v. Dept. for Head of Dept.	DATUM DATE
AA	18/12/2012	For Approval		

SURVEYED BY:
Lidar Survey
Received 25/10/2011
From Xstrata

HANDTEK / SIGNTR. DATUM / DATE

ONTWERP VIR / DESIGNED FOR
TWEEFONTEIN PROJECT
XSTRATA COAL SA

ONTWERP DEUR / DESIGNED BY
JEFFARES & GREEN PTY (Ltd)
ENGINEERING AND ENVIRONMENTAL CONSULTING
TEL. (012) 349-7900
FAX. (012) 349-7979
E-MAIL jgppta@jg.co.za
P.O. BOX 2973
PRETORIA
0001

ONTWERP GOEDGEKEUR
DESIGN APPROVED
PR.980444
nms Raadgewende Ingenieur
for Consulting Engineers
DATUM/DATE: _ _ _ _ _ _ _ _

GOEDGEKEUR DEUR
APPROVED BY
nms Hoof van Departement
for Head of Department
DATUM/DATE: _ _ _ _ _ _ _ _

ONTWERP DEUR DESIGNED BY	JN
NAGESIEN DEUR CHECKED BY	CCLR
GETEKEN DEUR DRAWN BY	RR
NAGESIEN DEUR CHECKED BY	CCLR

MPUMALANGA REGERING
OPENBARE WERKE,
PAAIE EN VERVOER
MPUMALANGA
MPUMALANGA GOVERNMENT
PUBLIC WORKS, ROADS
AND TRANSPORT

REALIGNMENT OF SOUTHERN BY-PASS

SHIFTING OF SERVICES SCHEDULE

SKAAL / SCALE	LÊER Nr / FILE No	DISTRIK / DISTRICT	PROVINSIE PLAN Nr / PROVINCE PLAN No
NTS	--	NKANGALA	--
	TIPE ONTWERP / TYPE OF PLANNING	PAD Nr / ROAD No	XSTRATA COAL PLAN Nr / PLAN No
	PRELIMINARY DESIGN	P141-1 & D2769	TOP-J&G-5003-CV-01-1409

PROVINCE PLAN No --
XSTRATA COAL PLAN No TOP-J&G-5003-CV-01-1409

V:\062398 - Tweefontein realignment\CC le Roux\03 Drawings\Working Drawings\ Alternative Design\TYPICAL DRAWING\03SHIFTING OF SERVICES SCHEDULE