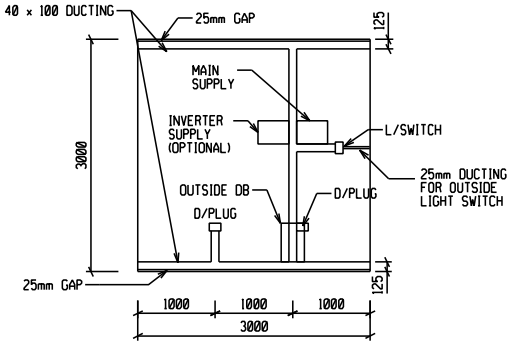


SECTION A - A

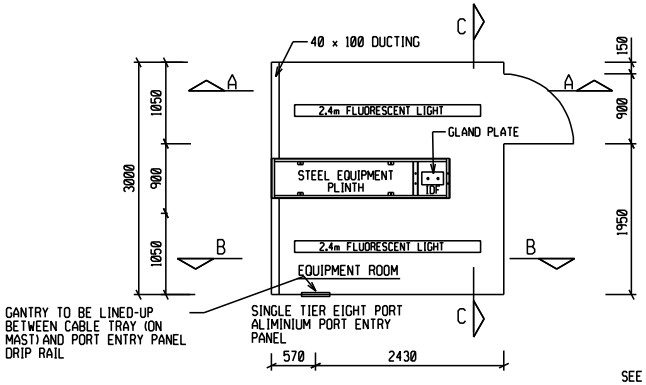


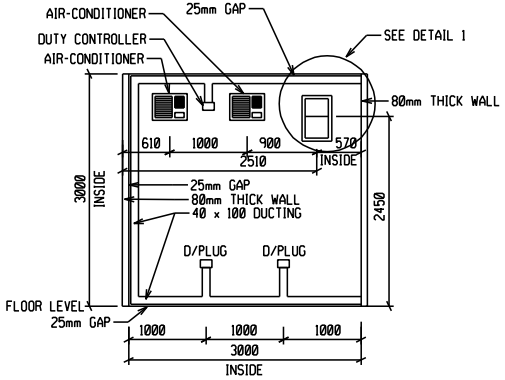


SECTION B - B

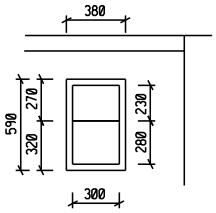


DETAIL 1

NOTE:

ROOF CHAMFER 25mm AWAY FROM AIR-CONDITIONERS

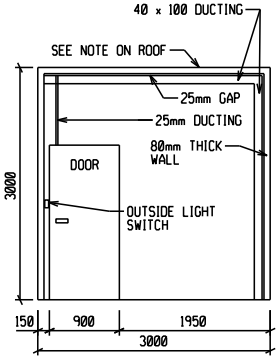


SECTION C - C

| | | | | | | | |
|---|---|---|---|---|---|---|---|
| | | | | | | SHT 3 | EQUIP SUPP & CABLE RACK |
| | | | | | | SHT 2 | PLAN LAYOUT & SECTIONS |
| 0 | | | FIRST ISSUE / EERSTE UITREIKING | | | SHT 1 | FOUNDATION LAYOUT |
| REV | AUTH MAG | DATE DATUM | REVISION/REVISIES INDEX REF/INDEKSVERW | BY DEUR | CHKD NAGES | | REFERENCE DRAWINGS VERWYSINGSTEKENINGE |

| | | | |
|---|---|---|---|
| DRG.TEK REGISTR | | | P.O. BOX 356 BLOEMFONTEIN |
| DESIGNED ONTWERP | | | ESKOM |
| CHECKED NAGESIEN | E. WADDINGTON | | |
| DRAWN GETEKEN | IAN JULY '03 | APPROVED E. WADDINGTON | GOEDGEKEUR |
| SCALE SKAAL | 1 : 50 | | |

BLOEMFONTEIN DISTRIBUTOR

# EQUIPMENT SHELTER SMALL (FOR SEALED LEAD ACID BATTRIES) PLAN LAYOUT & SECTIONS

D-FS-12500

SHEET 2 OF 3

REV 0

THE C.A.D. REFERENCE NUMBER IS: 12500S02

A3 SHEET