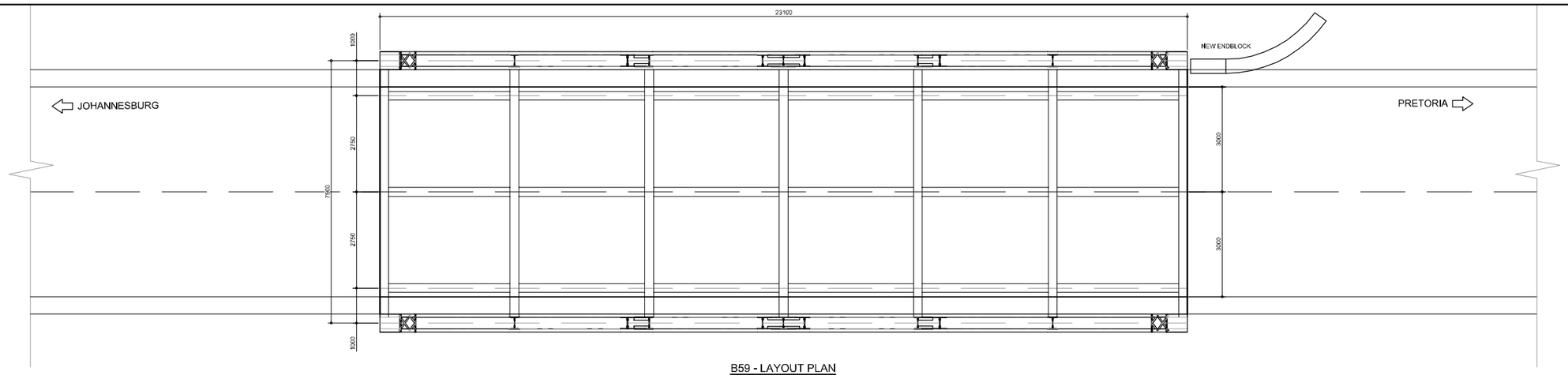

B59 - LAYOUT PLAN

SCALE = 1:50

ADDITIONAL NOTES

1. ALL STEEL PARTS TO BE GALVANIZED FOR RUST PROTECTION

STRUCTURAL STEEL NOTES:

1. ALL WELDS TO BE 6 mm FILLET WELDS UNLESS INDICATED OTHER WISE
2. ALL BOLTS TO BE GRADE 8.8 HFGB
3. ALL STEEL MEMBERS TO BE PAINTED WITH A CORROSION PROTECTION PAINT ACCORDING TO PROJECT SPECIFICATIONS.
4. ABBREVIATIONS CTC = CENTER TO CENTER

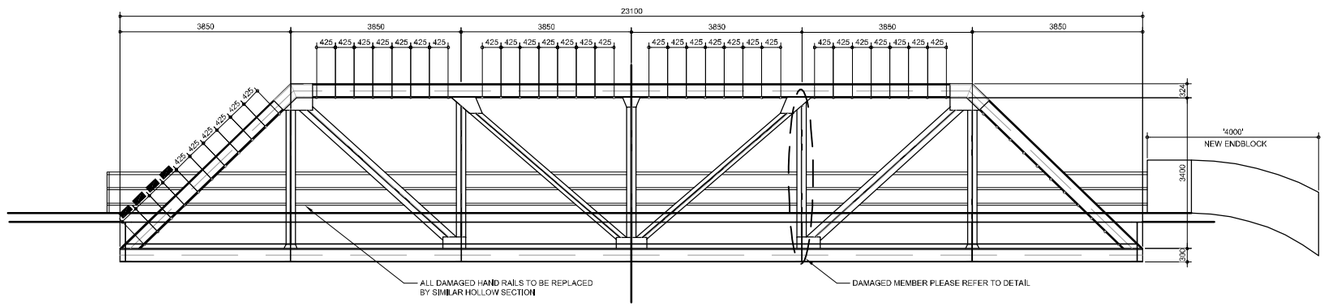

B59 - ELEVATION

SCALE = 1:50

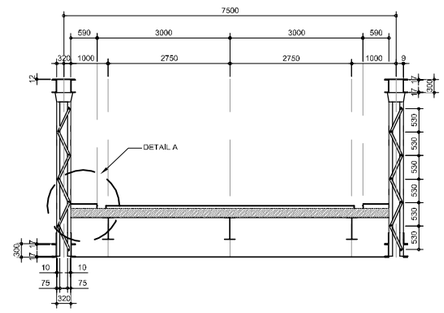

TYPICAL SECTION PERPENDICULAR ON BRIDGE CENTRELINE

SCALE = 1 : 50

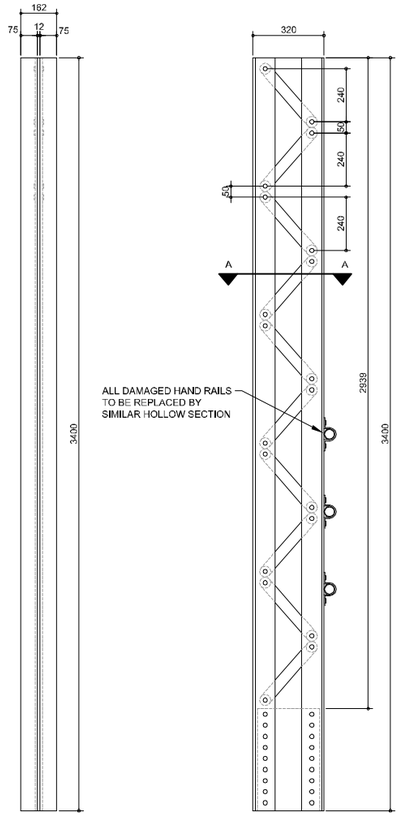

EXISTING SIDE ELEVATION

SCALE = 1:10

EXISTING SIDE ELEVATION

SCALE = 1:10

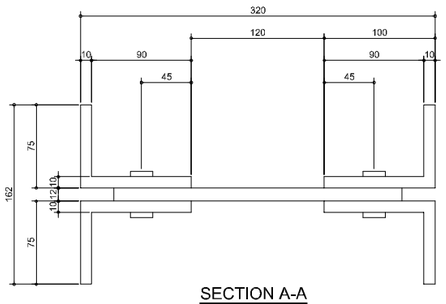

SECTION A-A

SCALE = 1:2

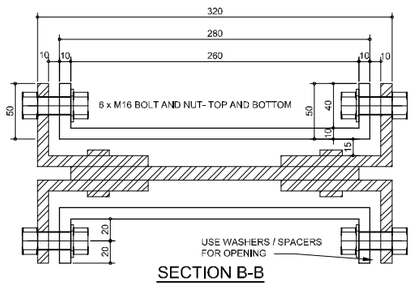

SECTION B-B

SCALE = 1:2

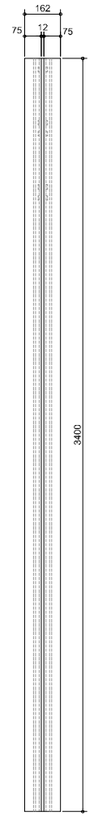

NEW SIDE ELEVATION

SCALE = 1:10

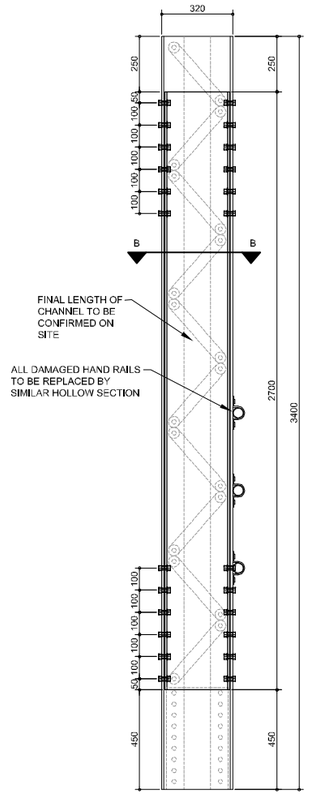

NEW SIDE ELEVATION

SCALE = 1:10

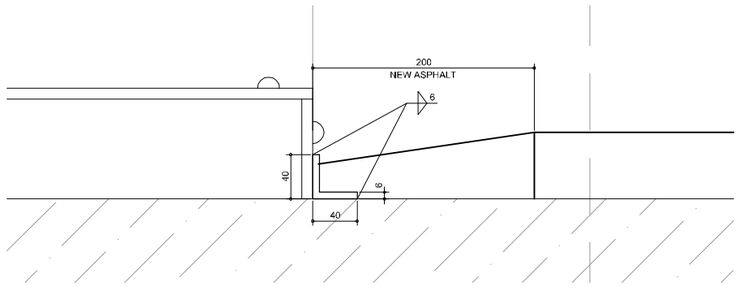

DETAIL B

SCALE = 1:2

WELDING NOTES:

1. ALL WELDING SHALL COMPLY WITH THE LATEST REQUIREMENTS OF SANS 10455. ALSO REFER TO THE WELD NOTES ON DRAWING NO ; 2914/PD/01.
2. THE LENGTH AND SIZE OF ALL WELDS SHALL BE IN ACCORDANCE WITH THE DRAWING OR AS SPECIFIED BY THE ENGINEER. ONLY SKILLED OPERATORS SHALL BE EMPLOYED AND WELD TEST SAMPLES SHALL BE SUBMITTED ON REQUEST
3. ALL WELDING SURFACES SHALL BE CLEAN AND FREE FROM RUST, SCALE, PAINT OR FOREIGN MATERIALS. FUSION FACES SHALL BE GROUND SMOOTH BEFORE WELDING
4. THE WELDING METHOD SHALL PREVENT DISTORTION OF THE WELD OR PARENT SECTION
5. THE SIZE OF THE WELDS REFER TO THE THROAT OF THE WELD.
6. ALL WELDS SHALL HAVE ADEQUATE ROOT FUSION. WELDS SHALL BE FREE FROM CRACKS, CAVITIES OR IRREGULARITIES. UNDERCUTTING SHALL BE FILLED BY ADDITIONAL WELD RUNS. ANY COMPLETED WELD WITH DEFECTS SHALL BE REMOVED AND REPAIRED AT THE CONTRACTORS OWN EXPENSE.
7. WELD SIZES INDICATED ON THE DRAWING ARE THE NETT SIZES REQUIRED AFTER GRINDING.
8. ALL WELDING SHALL USE E70XX ELECTRODES

Nr. No.	DATUM DATE	WYSIGINGS / ADMENDMENTS	na HOOF VAN DEPT. for HEAD OF DEPT.	DATUM DATE
REV 1	2017-03-10	ISSUED FOR TENDER PURPOSES	BH SCHLEBUSCH	2017-03-10

OPGEMEET DEUR / SURVEYED BY: HANDTEKN / SIGNTR. — DATUM / DATE

ADJ. DIR. TEGNDIENSTE / DIR. TECH. SERVICES / OPMETING / SURVEY — DATUM / DATE

ONTWERP DEUR / DESIGNED BY: KBK Engineers (Pty) Ltd

BH SCHLEBUSCH — ONTWERP/DESIGNED
TF GOERTZE — GETEKENDRAWN
BH SCHLEBUSCH — NAGESIEN/CHECKED

GOEDGEKEUR / APPROVED: for CONSULTING ENG. DATUM DATE; na HOOF VAN DEPT. for HEAD OF DEPT. DATUM DATE

DEPARTEMENT VAN PAAIE EN VERVOER / GPDRT / DEPARTMENT OF ROADS AND TRANSPORT

REHABILITATION OF EIGHT SELECTED BRIDGES IN TSHWANE REGION WITHIN THE GAUTENG PROVINCE
BRIDGE B59 HENNOPSRIVER CROSSING
BRIDGE REPAIR DETAILS

roads and transport — Department: Roads and Transport — GAUTENG PROVINCE

SKAAL / SCALE	LEER Nr. /FILE No.	DISTRIK / DISTRICT	BRIDGE No./BRUG Nr.
HOR. AS SHOWN	OOREENKOMS Nr. AGREEMENT No. DRT 05/05/2015	PAD Nr. /ROAD No. R511	BRIDGE NO. B59
VERT. AS SHOWN			PLAN Nr. /PLAN No. KBK/3221/B59/02/V1