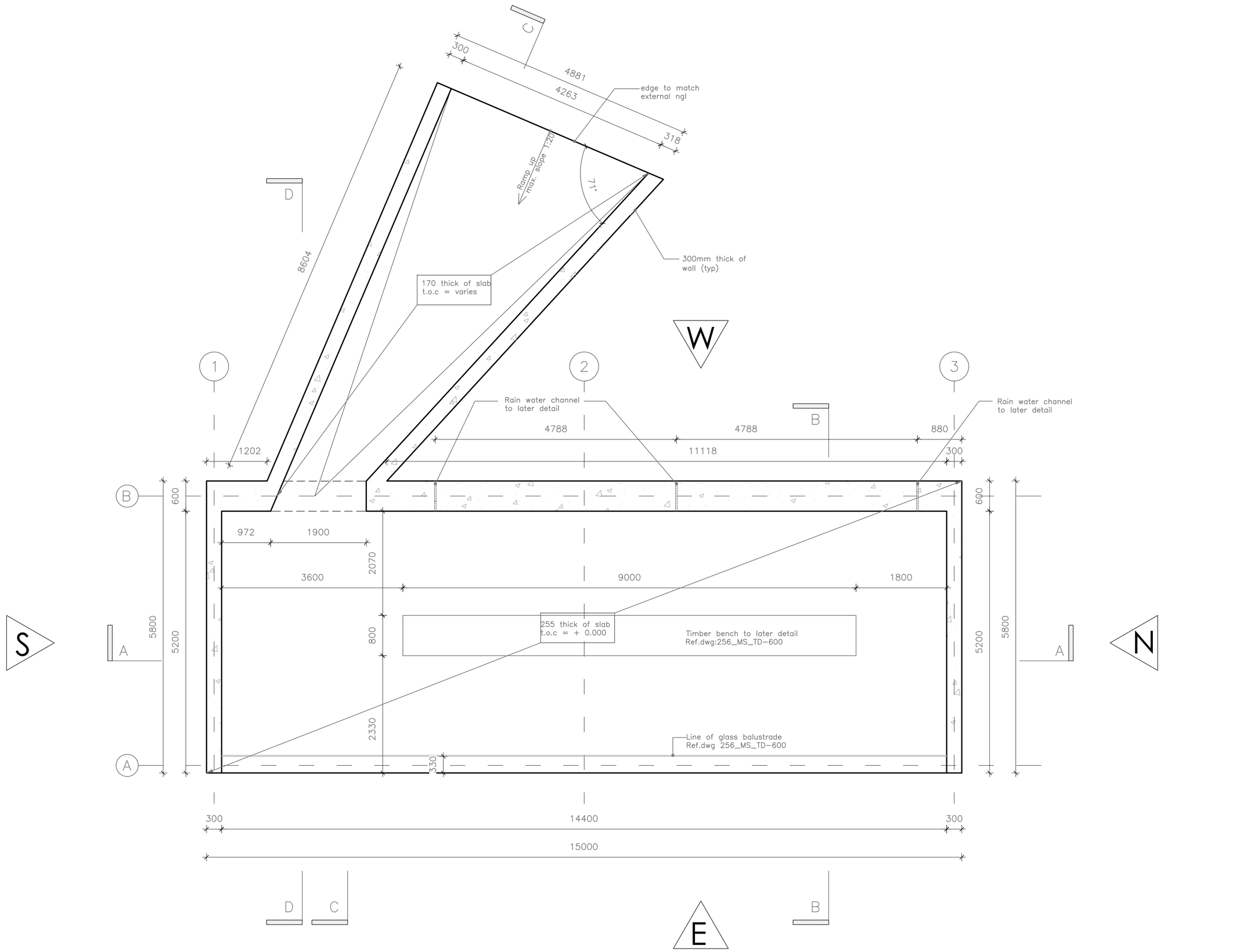

Ground Floor Plan

SCALE 1:50

NORTH

notes

- All work is to be done in accordance with the National Building Regulations.
- All materials and workmanship are to comply with the relevant S.A.B.S codes.
- This drawing is not to be scaled. Figured dimensions to be used. All dimensions are in millimeters unless otherwise stated.
- This drawing must be read in conjunction with all other the relevant drawings and specifications.
- All dimensions and levels must be checked on site by the contractor before putting work in
- Any discrepancies on the drawings are to be brought to the architects attention by the contractor before putting work in.
- The contractor must obtain the architects' written confirmation of any instructions which involve a variation to the contract before putting work in hand.
- All voids, suspended ceilings and partitions to be rodent proof in accordance with the Government rodent proofing regulations.
- All mechanical and electrical work is to be done in accordance with the National Building Regulations.
- Contractors and sub-contractors are to check all site dimensions and levels before commencing work.
- Figured dimensions to be taken in preference to scale dimensions.
- The architects are to be notified of any variations.
- The design of this drawing is the copyright of the architects.
- Each contractor shall be responsible for ensuring the structural stability of all components of his work and ascertain that the main structure is capable of supporting all loads applied thereto.
- Brickwork ties & central joint by structural engineer

specific notes

revisions

NO	DATE	DESCRIPTION	BY
A	2014.07.08	ISSUED FOR INFORMATION	MS
B	2014.10.31	ISSUED FOR INFORMATION	GB
C	2015.01.19	ISSUED FOR INFORMATION	BM

client THE INDEPENDENT DEVELOPMENT TRUST

architects

mashabane rose associates

architects . urban designers . planners

Tel +27 11 486 1057 Fax +27 11 486 1097 mra@icon.co.za www.mashabanerose.co.za

CONSULTANTS	service	contact
IDT	implementing agent	ALFRED TAPALA RAMOOKE tel: cell : 079 872 5441 email: tapala@idt.org.za
MRA	architect	PHILL MASHABANE tel: 011 486 1057 cell : 083 799 9845 e: phill@mashabanerose.co.za
	architect	GILBERT BALINDA tel: 011 486 1057 cell: 079 037 5838 email: gilbert@mashabanerose.co.za
ILISO CONSULTING	civil engineer/ wet services	ROBERT STONE tel: 012 685 0900 cell: 083 799 9845 email: robert@iliso.com
THEMBA CONSULTING	structural engineer	EARL BAILEY tel: 011 234 9380 cell: 083 676 1667 email: eb@themba.co.za
DIHLASE	mechanical engineer	EMILE COETZER tel 011 789 4560 cell : 083 717 1302 email: emilec@dihlase.co.za
	electrical engineer	THABO KOMANE tel 011 789 4560 cell : 082 774 4712 email: thabok@dihlase.co.za
MMQS	quantity surveyor	THEMBA MOYO tel : cell : email: themba@mmqs.co.za

APPROVALS	SIGNATURES

Locality plan

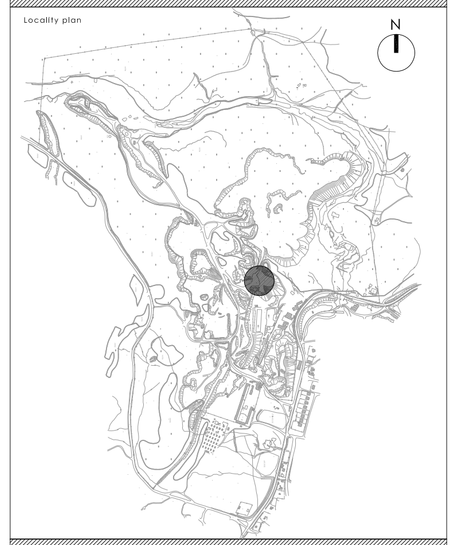

drawing title

Taung skull heritage site

THE MEMORIAL SITE

FOR TENDER

scale	drawn	first issue
1:50	MS	2014.07.08

drawing number

GROUND FLOOR PLAN
265_MS_TD-100

revision no. **C**

project no.	project
265	TAUNG SKULL HERITAGE