Eskom requirements for work in or near Eskom servitudes.

1. Eskom's rights and services must be acknowledged and respected at all times.

2. Eskom shall at all times retain unobstructed access to and egress from its servitudes.

3. Eskom's consent does not relieve the developer from obtaining the necessary statutory, land owner or municipal approvals.

4. Any cost incurred by Eskom as a result of non-compliance to any relevant environmental legislation will be charged to the developer.

5. If Eskom has to incur any expenditure in order to comply with statutory clearances or other regulations as a result of the developer's activities or because of the presence of his equipment or installation within the servitude restriction area, the developer shall pay such costs to Eskom on demand.

6. The use of explosives of any type within 500 metres of Eskom's services shall only occur with Eskom's previous written permission. If such permission is granted the developer must give at least fourteen working days prior notice of the commencement of blasting. This allows time for arrangements to be made for supervision and/or precautionary instructions to be issued in terms of the blasting process. It is advisable to make application separately in this regard.

7. Changes in ground level may not infringe statutory ground to conductor clearances or statutory visibility clearances. After any changes in ground level, the surface shall be rehabilitated and stabilised so as to prevent erosion. The measures taken shall be to Eskom's satisfaction.

8. Eskom shall not be liable for the death of or injury to any person or for the loss of or damage to any property whether as a result of the encroachment or of the use of the servitude area by the developer, his/her agent, contractors, employees, successors in title, and assignees. The developer indemnifies Eskom against loss, claims or damages including claims pertaining to consequential damages by third parties and whether as a result of damage to or interruption of or interference with Eskom's services or apparatus or otherwise. Eskom will not be held responsible for damage to the developer's equipment.

9. No mechanical equipment, including mechanical excavators or high lifting machinery, shall be used in the vicinity of Eskom's apparatus and/or services, without prior written permission having been granted by Eskom. If such permission is granted the developer must give at least seven working days' notice prior to the commencement of work. This allows time for arrangements to be made for supervision and/or precautionary instructions to be issued by the relevant Eskom Manager

   Note: Where and electrical outage is required, at least fourteen work days are required to arrange it.

10. Eskom's rights and duties in the servitude shall be accepted as having prior right at all times and shall not be obstructed or interfered with.

11. Under no circumstances shall rubble, earth or other material be dumped within the servitude restriction area. The developer shall maintain the area concerned to Eskom's satisfaction. The developer shall be liable to Eskom for the cost of any remedial action which has to be carried out by Eskom.

12. The clearances between Eskom's live electrical equipment and the proposed construction work shall be observed as stipulated by *Regulation 15* of the *Electrical Machinery Regulations of the Occupational Health and Safety Act, 1993 (Act 85 of 1993).*

13. Equipment shall be regarded electrically live and therefore dangerous at all times.

14. In spite of the restrictions stipulated by Regulation 15 of the Electrical Machinery Regulations of the Occupational Health and Safety Act, 1993 (Act 85 of 1993), as an additional safety precaution, Eskom will not approve the erection of houses, or structures occupied or frequented by human beings, under the power lines or within the servitude restriction area.

15. Eskom may stipulate any additional requirements to highlight any possible exposure to Customers or Public to coming into contact or be exposed to any dangers of Eskom plant.

16. It is required of the developer to familiarise himself with all safety hazards related to Electrical plant.

17. Any third party servitudes encroaching on Eskom servitudes shall be registered against Eskom's title deed at the developer's own cost. If such a servitude is brought into being, its existence should be endorsed on the Eskom servitude deed concerned, while the third party's servitude deed must also include the rights of the affected Eskom servitude.

John Geeringh (Pr Sci Nat)

Senior Consultant Environmental Management
Eskom GC: Land Development

Eskom	SCOT	Technology

Title:	**Renewable Energy Generation Plant Setbacks to Eskom Infrastructure**	Unique Identifier:	**240-65559775**
		Alternative Reference Number:	**N/A**
		Area of Applicability:	**Power Line Engineering**
		Documentation Type:	**Guideline**
		Revision:	**0**
		Total Pages:	**8**
		Next Review Date:	**N/A**
		Disclosure Classification:	**CONTROLLED DISCLOSURE**

Compiled by	Approved by	Authorised by
.....	.....	.....
J W Chetty	**V Naidoo**	**R A Vajeth**
Mechanical Engineer	**Chief Engineer (Lines)**	**Acting Snr Manager (Lines)**
Date: 20/02/2014	Date: 24/02/2014	Date: 27/2/2014

Supported by SCOT/SC

.....

R Vajeth

SCOT/SC/ Chairperson

Date: 27/2/2014

PCM Reference: 240-65132732 **LINE ENGINEERING SERVICES**

SCOT Study Committee Number/Name : **OVERHEAD LINES**

CONTENTS

Page

EXECUTIVE SUMMARY **3**

1. INTRODUCTION **4**

2. SUPPORTING CLAUSES **4**

2.1 SCOPE 4
2.1.1 Purpose 4
2.1.2 Applicability 5
2.2 NORMATIVE/INFORMATIVE REFERENCES 5
2.2.1 Normative 5
2.2.2 Informative 5
2.3 DEFINITIONS 5
2.3.1 Disclosure Classification 6
2.4 ABBREVIATIONS 6
2.5 ROLES AND RESPONSIBILITIES 6
2.6 PROCESS FOR MONITORING 6
2.7 RELATED/SUPPORTING DOCUMENTS 6

3. DOCUMENT CONTENT **6**

3.1 INTERNATIONAL SETBACK COMPARISON 6
3.2 ESKOM APPROACH FOR WIND FARMS 7

4. AUTHORISATION **8**

5. REVISIONS **8**

6. DEVELOPMENT TEAM **9**

FIGURES

Figure 1: Horizontal Axis Wind Turbine 8

CONTROLLED DISCLOSURE

When downloaded from the EDMS, this document is uncontrolled and the responsibility rests with the user to ensure it is in line with the authorised version on the system.

EXECUTIVE SUMMARY

In recent decades, the use of wind turbines, concentrated solar plants and photovoltaic plants have been on the increase as it serves as an abundant source of energy. This document specifies setbacks for wind turbines and the reasons for these setbacks from infrastructure as well as setbacks for concentrated solar plants and photovoltaic plants. Setbacks for wind turbines employed in other countries were compared and a general setback to be used by Eskom was suggested for use with wind turbines and other renewable energy generation plants.

CONTROLLED DISCLOSURE

When downloaded from the EDMS, this document is uncontrolled and the responsibility rests with the user to ensure it is in line with the authorised version on the system.

1. INTRODUCTION

During the last few decades, a large amount of wind turbines have been installed in wind farms to accommodate for the large demand of energy and depleting fossil fuels. Wind is one of the most abundant sources of renewable energy. Wind turbines harness the energy of this renewable resource for integration in electricity networks. The extraction of wind energy is its primary function and thus the aerodynamics of the wind turbine is important. There are many different types of wind turbines which will all exhibit different wind flow characteristics. The most common wind turbine used commercially is the Horizontal Axis Wind Turbine. Wind flow characteristics of this turbine are important to analyse as it may have an effect on surrounding infrastructure.

Wind turbines also cause large turbulence downwind that may affect existing infrastructure. Debris or parts of the turbine blade, in the case of a failure, may be tossed behind the turbine and may lead to damage of infrastructure in the wake path.

This document outlines the minimum distances that need to be introduced between a wind turbine and Eskom infrastructure to ensure that debris and / or turbulence would not negatively impact on the infrastructure.

Safety distances of wind turbines from other structures as implemented by other countries were also considered and the reasons for their selection were noted.

Concentrated solar plants and photovoltaic plants setbacks away from substations were also to be considered to prevent restricting possible power line access routes to the substation.

2. SUPPORTING CLAUSES

2.1 SCOPE

This document provides guidance on the safe distance that a wind turbine should be located from any Eskom power line or substation. The document specifies setback distances for transmission lines (220 kV to 765 kV), distribution lines (6.6 kV to 132 kV) and all Eskom substations. Setbacks for concentrated solar plants and photovoltaic plants are also specified away from substations.

2.1.1 Purpose

Setbacks for wind turbines and power lines / substations are required for various reasons. These include possible catastrophic failure of the turbine blade that may release fragments and which may be thrown onto nearby power lines that may result in damage with associated unplanned outages. Turbulence behind the turbine may affect helicopter flight during routine Eskom live line maintenance and

CONTROLLED DISCLOSURE
When downloaded from the EDMS, this document is uncontrolled and the responsibility rests with the user to ensure it is in line with the authorised version on the system.

inspections that may lead to safety risk of the aircraft / personnel. Concentrated solar plants and photovoltaic plants setback away from substations were required to prevent substations from being boxed in by these renewable generation plants limiting line route access to the substations.

2.1.2 Applicability

This document is applicable to the siting of all new and existing wind turbines, concentrated solar plants and photovoltaic plants near power lines and substations.

2.2 NORMATIVE/INFORMATIVE REFERENCES

2.2.1 Normative

1. http://www.envir.ee/orb.aw/class=file/action=preview/id=1170403/Hiiumaa+turbulence+impact+EMD.pdf.
2. http://www.energy.ca.gov/2005publications/CEC-500-2005-184/CEC-500-2005-184.PDF
3. http://www.adamscountywind.com/Revised%20Site/Windmills/Adams%20County%20Ordinance/Adams%20County%20Wind%20Ord.htm
4. http://www.dsireusa.org/incentives/incentive.cfm?Incentive_Code=PA11R&RE=1&EE=1
5. http://www.wind-watch.org/documents/european-setbacks-minimum-distance-between-wind-turbines-and-habitations/
6. http://www.publications.parliament.uk/pa/ld201011/ldbills/017/11017.1-i.html
7. http://www.caw.ca/assets/pdf/Turbine_Safety_Report.pdf
8. Rogers J, Slegers N, Costello M. (2011) A method for defining wind turbine setback standards. Wind energy 10.1002/we.468

2.2.2 Informative

None

2.3 DEFINITIONS

Definition	Description
Setback	The minimum distance between a wind turbine and boundary line/dwelling/road/infrastructure/servitude etc.
Flicker	Effect caused when rotating wind turbine blades periodically cast shadows
Tip Height	The total height of the wind turbine ie. Hub height plus half rotor diameter (see Figure1)

CONTROLLED DISCLOSURE
When downloaded from the EDMS, this document is uncontrolled and the responsibility rests with the user to ensure it is in line with the authorised version on the system.

2.3.1 Disclosure Classification

Controlled disclosure: controlled disclosure to external parties (either enforced by law, or discretionary).

2.4 ABBREVIATIONS

Abbreviation	Description
None	

2.5 ROLES AND RESPONSIBILITIES

All personnel involved in the positioning wind turbines, concentrated solar plants and photovoltaic plants near power lines/substations must follow the setbacks outlined in this guideline.

2.6 PROCESS FOR MONITORING

Approval by Eskom in writing.

2.7 RELATED/SUPPORTING DOCUMENTS

None

3. DOCUMENT CONTENT

3.1 INTERNATIONAL SETBACK COMPARISON

Wind Turbine setbacks employed by various countries were considered. It was found that setbacks were determined for various reasons that include noise, flicker, turbine blade failure and wind effects. The distances (setbacks) varied based on these factors and were influenced by the type of infrastructure

Wind turbine setbacks varied for roads, power lines, dwellings, buildings and property and it was noted that the largest setbacks were employed for reasons of noise and flicker related issues [1-7]. Very few countries specified setbacks for power lines.

The literature survey [1-7], yielded information about studies and experiments were conducted to determine the distance that a broken fragment from a wind turbine might be thrown. Even though of low probability of hitting a power line [5.0×10^{-5} [8]], the distances recorded were significant [750m [8]]

Setbacks were thus introduced to prevent any damage to Eskom infrastructure.

CONTROLLED DISCLOSURE
When downloaded from the EDMS, this document is uncontrolled and the responsibility rests with the user to ensure it is in line with the authorised version on the system.

Wind turbines may also cause changes in wind patterns with turbulent effects behind the hub. These actors dictate the wind turbine setbacks specified in this document.

Concentrated solar plants and photovoltaic plants also can limit access into the substation for power lines of all voltages. A setback distance must therefore be employed to prevent the substation from being boxed in by these generation plants. These setback distances are specified in this document.

3.2 ESKOM REQUIRED SETBACKS

- Eskom requires a setback distance of 3 times the tip height of the wind turbine from the edge of the closest Eskom servitude (including vacant servitudes) for transmission lines.
- Eskom requires a setback distance of 1 times the tip height of the wind turbine from the edge of the closest Eskom servitude (including vacant servitudes) for distribution Lines.
- Eskom must be informed of any proposed wind turbine, concentrated solar plants and photovoltaic activity within a 5 km radius of a substation. No wind turbine structure shall be built within a 2 km radius of the closest point of the substation. Where concentrated solar plants and photovoltaic structures fall within a 2 km radius of the closest point of a substation, Eskom should be informed in writing during the planning phase of the construction of such plant or structure.
- Applicants must show that Eskom radio telecommunication systems (mainly microwave systems) will not be affected in any way by wind turbines.

CONTROLLED DISCLOSURE
When downloaded from the EDMS, this document is uncontrolled and the responsibility rests with the user to ensure it is in line with the authorised version on the system.

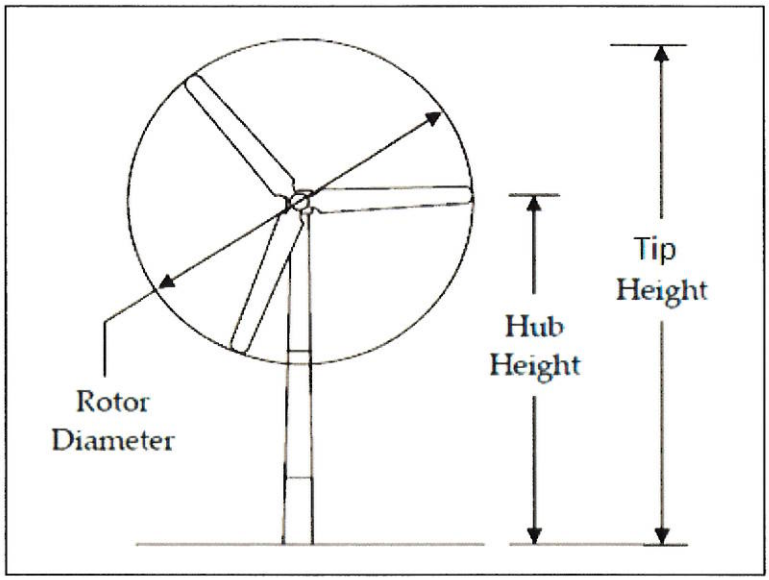

Figure 1: Horizontal Axis Wind Turbine [2]

4. AUTHORISATION

This document has been seen and accepted by:

Name & Surname	Designation
V Naidoo	Chief Engineer
Dr P H Pretorius	Electrical Specialist
J Geeringh	Snr Consultant Environ Mngt
B Haridass	Snr Consultant Engineer
R A Vajeth	Acting Snr Manager (Lines)

5. REVISIONS

Date	Rev.	Compiler	Remarks
November 2013	0	J W Chetty	First Publication - No renewable energy generation plant setback specification in existence

CONTROLLED DISCLOSURE

When downloaded from the EDMS, this document is uncontrolled and the responsibility rests with the user to ensure it is in line with the authorised version on the system.

6. DEVELOPMENT TEAM

The following people were involved in the development of this document:

Jonathan W Chetty (Mechanical Engineer)

Vivendhra Naidoo (Chief Engineer)

Dr Pieter H Pretorius (Electrical Specialist)

John Geeringh (Snr Consultant Environ Mngt)

Bharat Haridass (Snr Consultant Engineer)

Riaz A Vajeth (Acting Snr Manager (Lines))

CONTROLLED DISCLOSURE

When downloaded from the EDMS, this document is uncontrolled and the responsibility rests with the user to ensure it is in line with the authorised version on the system.