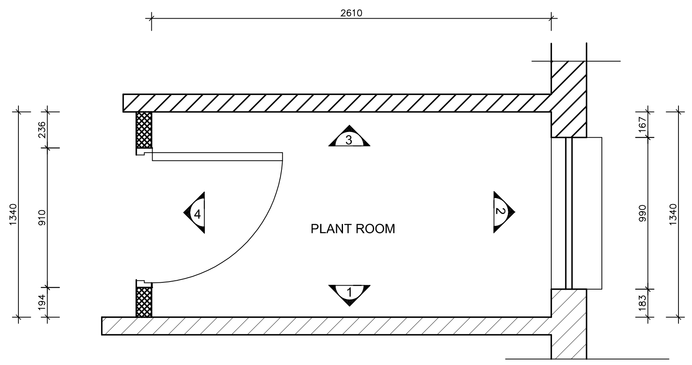

PLANT ROOM - PLAN
Scale 1:20

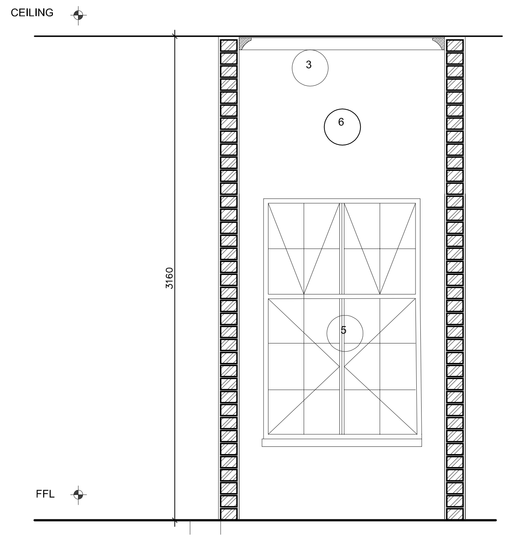

PLANT ROOM - ELEVATION 2
Scale 1:20

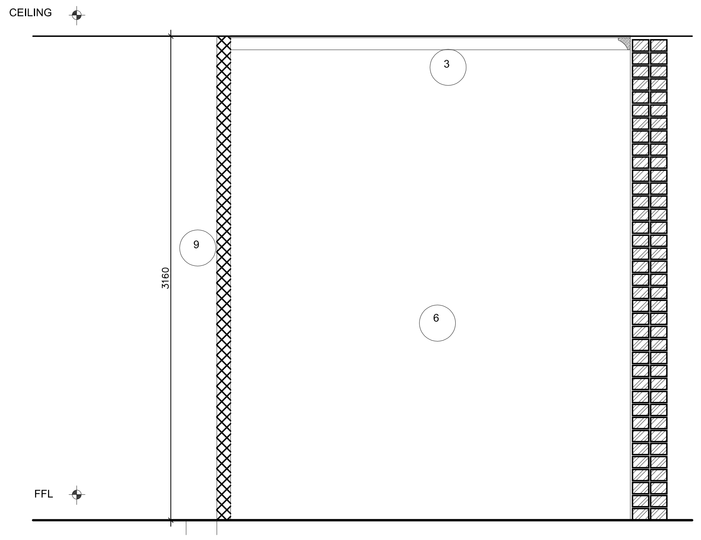

PLANT ROOM - ELEVATION 3
Scale 1:20

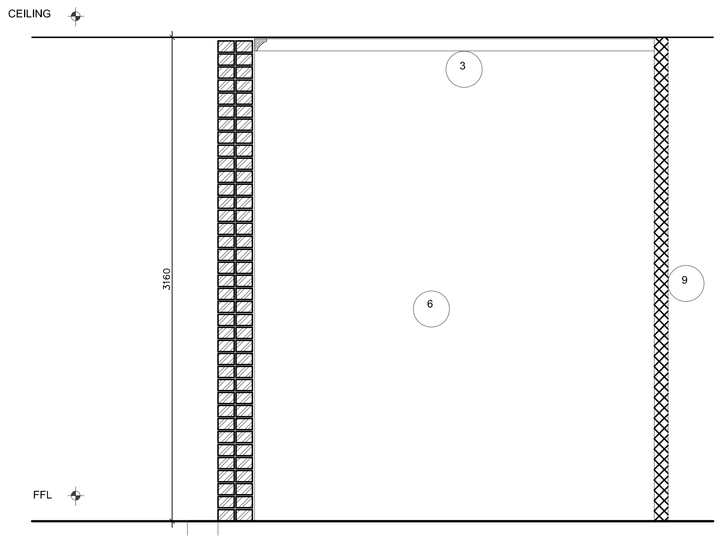

PLANT ROOM - ELEVATION 1
Scale 1:20

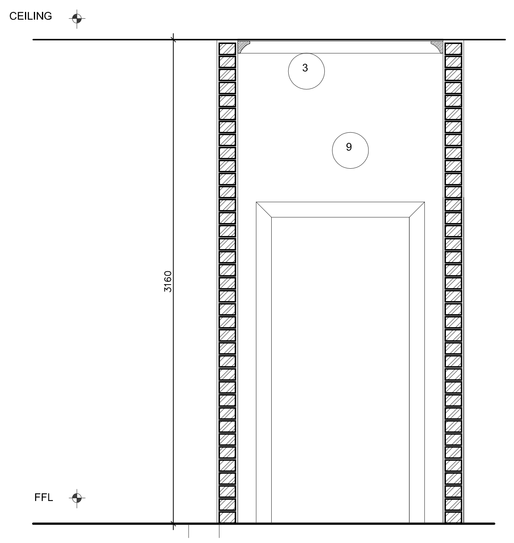

PLANT ROOM - ELEVATION 4
Scale 1:20

SPECIFICATION NOTES.

1. 100 x 20mm timber dado rail at 890mm above FFL
2. 70 x 20mm timber dado rail at 2550mm above FFL
3. Decorative cornice to detail
4. 100 x20mm timber architrave as per door schedule
5. Steel framed window as per window schedule
6. Plaster & paint to match existing
7. Timber framed fixed glazing as per window schedule
8. 2100mm high drywall partition
9. Drywall partition to U/S slab
10. Timber doors to be replaced as per door schedule
11. 450mm wide timber shelving on metal wall bands
12. 200 x 20mm timber skirting to detail
13. Existing fireplace to be restored
14. Chimney to be reconstructed to match existing
15. 20mm half round moulded timber frame
16. Ceramic tiles to be replaced to match existing
17. New ceiling to match existing
18. Timber counter top to be replaced to match existing
19. New blinds to be provided to windows to replace curtains

LOCATION PLAN

NO.	DATE	AMENDMENTS AND REVISIONS
A		AMENDMENTS BEFORE CONTRACT COMMENCES
1		REVISIONS AFTER CONTRACT HAS COMMENCED

PROVINCE OF
KWA-ZULU NATAL
DEPARTMENT OF WORKS
PRIVATE BAG X9041
PIETERMARITZBURG
3200

L R architects
9 Wally Hayward Drive
Ashburton
Pietermaritzburg
3213
Tel : (+27) 33 326 1425
Fax: (+27) 86 670 8694
eMail: reesh@mweb.co.za
eMail: admin@lrarch.co.za

1 5 1 9 — PROJECT / DRAWING / REVISION

PROJECT
DEPARTMENT OF PUBLIC WORKS
KZN LEGISLATURE
REHABILITATION & RESTORATION
OF KZN LEGISLATURES LAW
SOCIETY BUILDING
WIMS 057929

DRAWING DESCRIPTION
PLANT ROOM
INTERNAL ELEVATIONS

DRAWING NO. **057929-L01-213** REV

SCALE 1 : 20	CHECKED
FILE NO. WIMS 057929	CLIENT
DATE 25-01-2016	DRAWN N.M

0 10 20 30 40 50 60 70 80 90 100