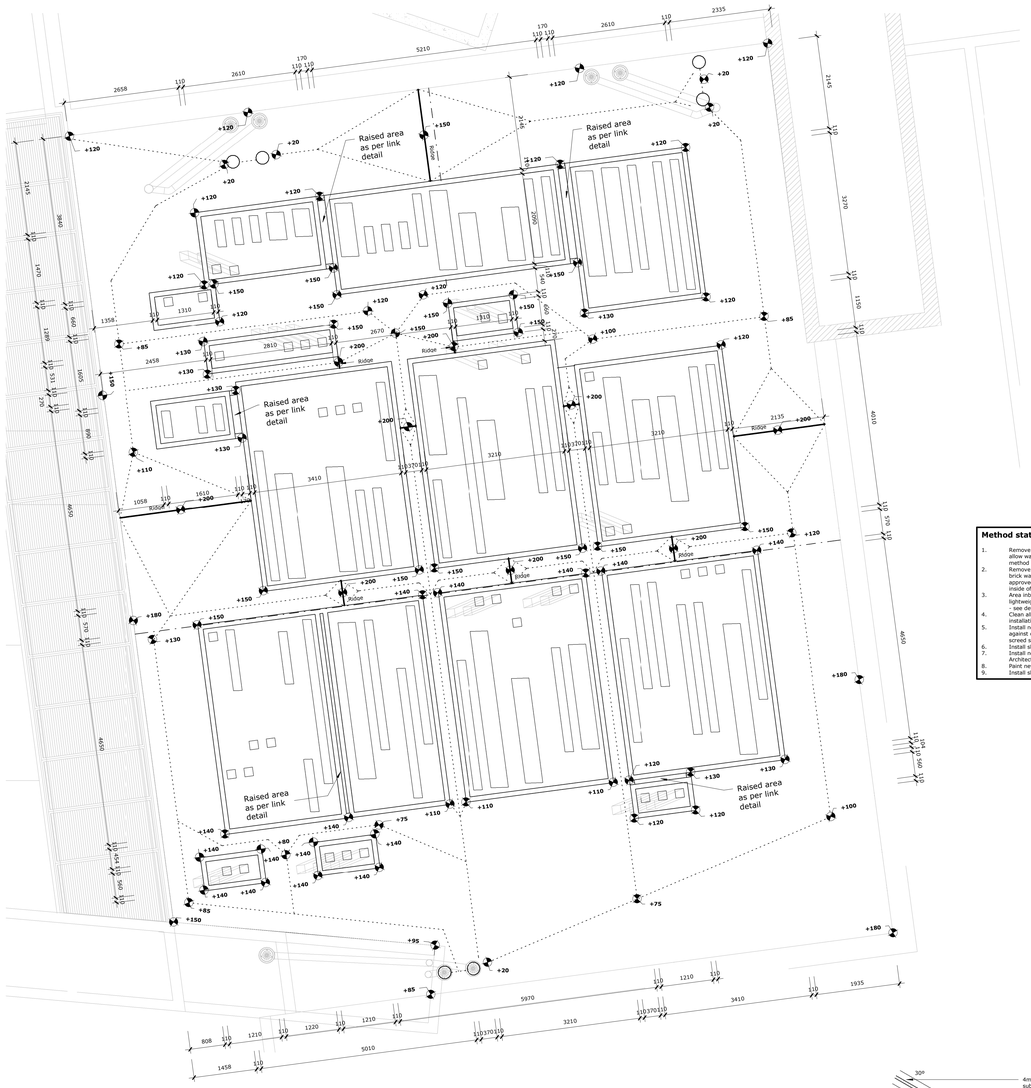


## Roof Plan - Skylights - Brickwork FR6

**1 : 50**

### Method statement for waterproofing and skylights replacement:

1. Remove existing skylights and waterproof the opening in slab as to not allow water ingress into the entrance foyer below - contractor to propose method for Architects approval
2. Remove existing waterproofing membrane and existing screeds and construct brick walls as indicated - plaster walls and paint inner face of walls - approved enamel paint (white) Clean and paint exposed concrete on inside of skylight space
3. Area inbetween closely spaced walls (as indicated) to be filled with lightweight concrete to one level below top of brick wall for skylight frame - see detail elsewhere
4. Clean all fullbores and protect against concrete ingress with screed installation
5. Install new light weight screeds with heights and falls as indicated up against outer faces of brick and concrete walls - see detail section and screed slopes drawing. Test flows to ensure efficient water run-of
6. Install skylight mounting frames ontop of brick work as indicated
7. Install new approved torch on waterproofing as per details and to Architects approval
8. Paint new waterproofing with approved reflective
9. Install skylights as per specialists and to Architects approval

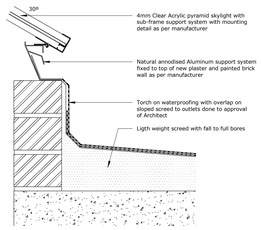


## Typical Skylight Section

**1 : 5**

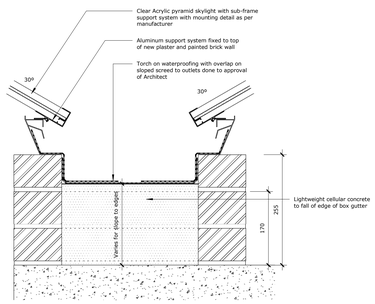


## Roof Skylight Section - Link

**1 : 5**

## Roof Plan - Skylights Entrance Foyer FR6

**1 : 50**

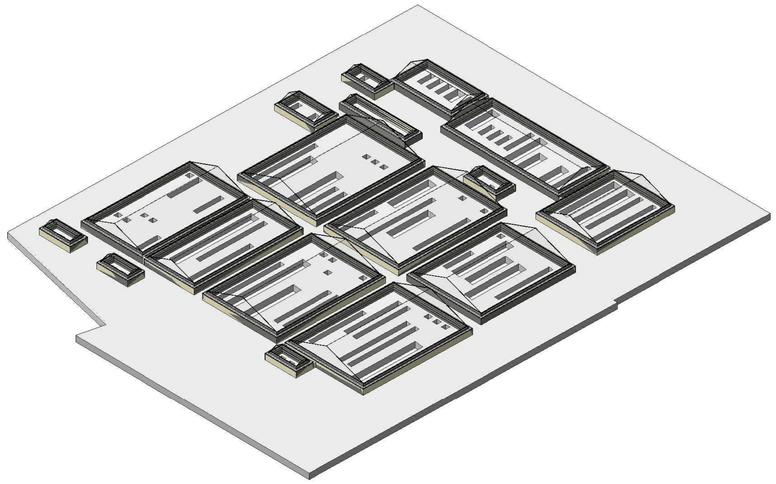

**Perspective View - Skylights**

NOTES

COPY RIGHT RESERVED
DUPLICATION OF THIS DRAWING IS STRICTLY PROHIBITED

| DRG. No. | REFERENCE DRAWINGS / DRAWING TITLE |
|---|---|
| | |

CLIENT

DBSA Development Bank of Southern Africa

public works — Department: Public Works, REPUBLIC OF SOUTH AFRICA

Royal HaskoningDHV
Enhancing Society Together

P.O. 25302
Monument Park
Pretoria
0105

Fountain Square
78 Kalkoen Street
Monument Park
Pretoria

Tel No. (012) 367-5800
Fax No. (012) 367-5989

PROJECT

**DBSA Maintenance Project - Constitutional Court**
Queens Road - Hillbrow

DRAWING DESCRIPTION

**Roof Level - Entrance Foyer Skylights**

FOR CONSTRUCTION

| | |
|---|---|
| DESIGNED: **S Cronje** | SIGNATURE AND DATE: 2018/05/16 01:52:47 PM |
| DRAWN: **S Cronje** | SIGNATURE AND DATE: 2018/05/16 01:52:47 PM |
| DRAWING CHECKED: **M Kruger** | SIGNATURE AND DATE: 2018/05/16 01:52:47 PM |
| DESIGN CHECKED: **M Kruger** | SIGNATURE AND DATE: 2018/05/16 01:52:47 PM |
| PROJ. PRINCIPAL / APPROVED: **M Kruger** | SIGNATURE AND DATE: 2018/05/16 01:52:47 PM |

| REV NUM | REVISION DATE | REVISION DESCRIPTION | CHANGED BY | APPROVED BY |
|---|---|---|---|---|
| 0 | 15/05/18 | FOR CONSTRUCTION | SC | MK |

| PROJECT No. | DATE. |
|---|---|
| **MD3052** | **2018/05/16 01:52:47 PM** |

| SHEET NUMBER | DISCIPLINE | PAPER SIZE | SCALE |
|---|---|---|---|
| Sheet of | Architectural | A0 | **As indicated** |

| DRAWING No. | REV. |
|---|---|
| **MD3052 - A -502** | 0 |

C:\Users\stephanvdc\Documents\DHV-DBSA-ARC-MD3052_stephanvdc.rvt