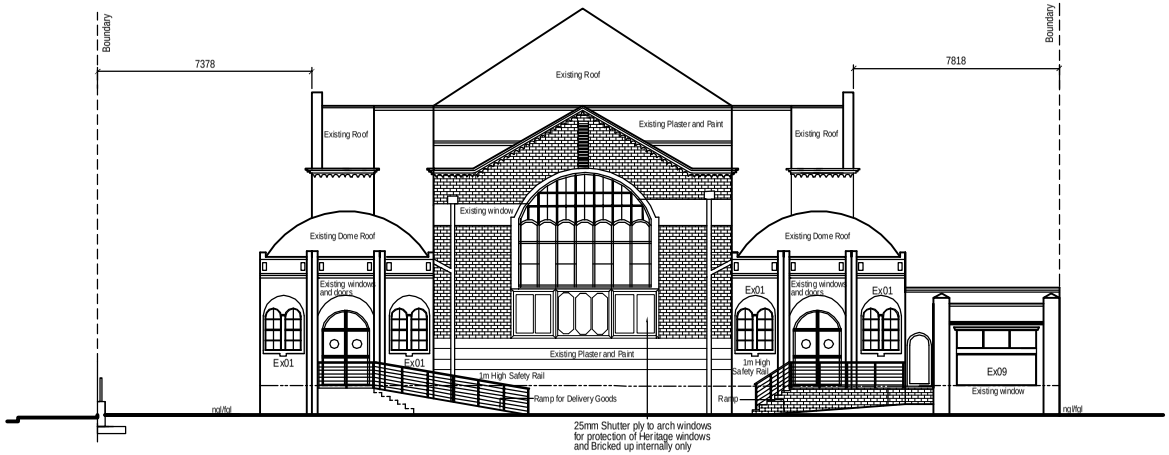

West Elevation - External - JOSEPH N DULI STREET

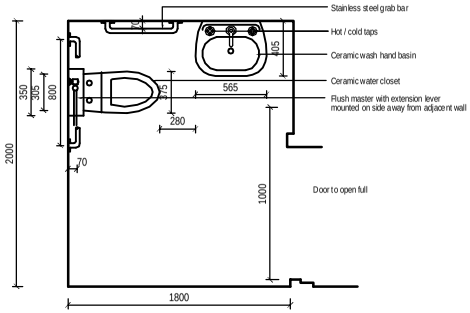

Plan of Disabled Wc 1:20

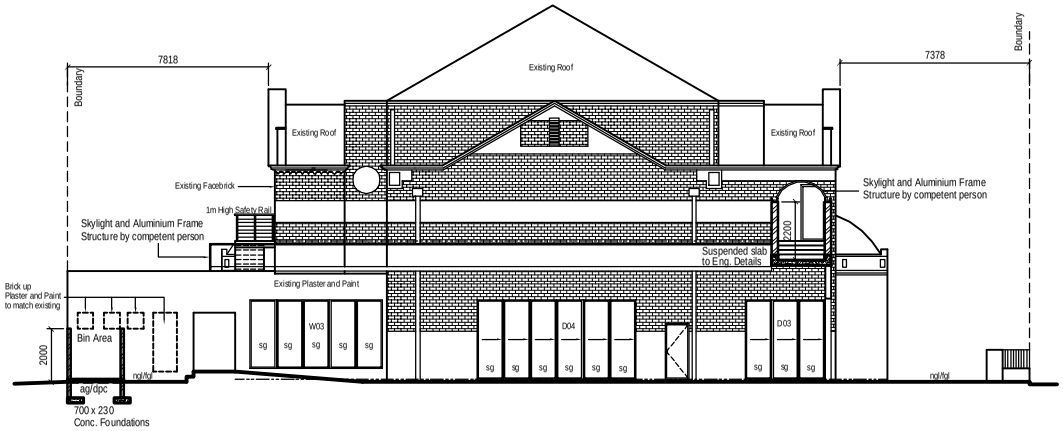

East Elevation - Internal - Arcade

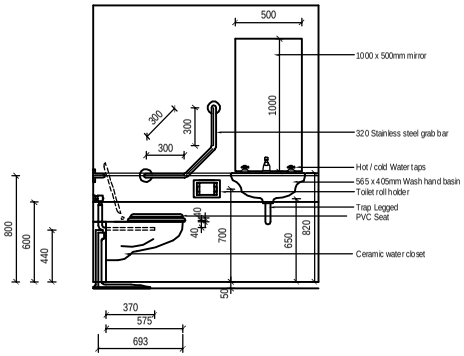

Elevation of Disabled Wc 1:20

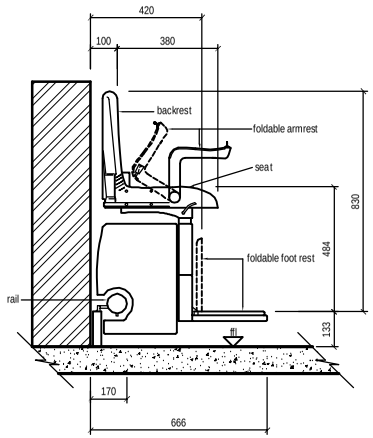

Side Elevation Stairlift 1:10

Supply voltage - 230 VAC
Speed - 0.15m/s (max)
Load (max) - 125kg

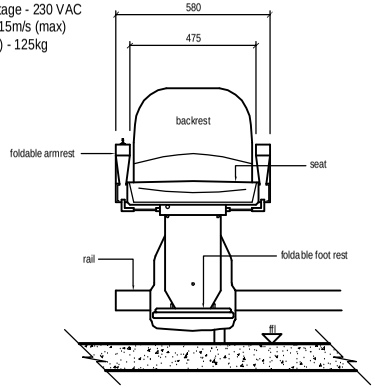

Front Elevation Stairlift 1:10

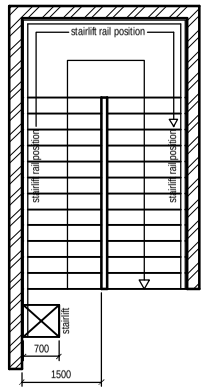

Plan View of Stairlift showing typical position 1:50

Owner.....

Additions and Alterations and Conversion of Existing Church to Business and Residential Purposes, at 43 Maud Mfusi Street on ERF 10726 Durban and Portion of 10726 Durban for Donfield Investments cc

Rate no: 0060 2080/000
Rate no: 0060 3090/000
Rate no: 0060 4000/000

GRAHAM BRAUM
architectural designer
PR.S.ARCH.T
reg .no. ST 0010

360 UMBILO ROAD
DURBAN
4001

TEL : 031 2054142
FAX : 031 2052476
CELL: 0824540441
EMAIL : gpb_arch@telkomsa.net

scale	1:100
designed	g.p. braum
drawn	J.J
date	September 2013

drawing no: 6222/13/ 6 of 6